THIS DRAWING IS UNPUBLISHED. RELEASED FOR PUBLICATION -,- .
© COPYRIGHT - By - ALL RIGHTS RESERVED.

LOC	DIST
AF	50

REVISIONS

P	LTR	DESCRIPTION	DATE	DWN	APVD
	R	REVISED PER ECR-12-013445	18OCT12	KH	PD

1 CONTINUOUS STRIP ON REELS.

2 FEED TO BE .530±.005

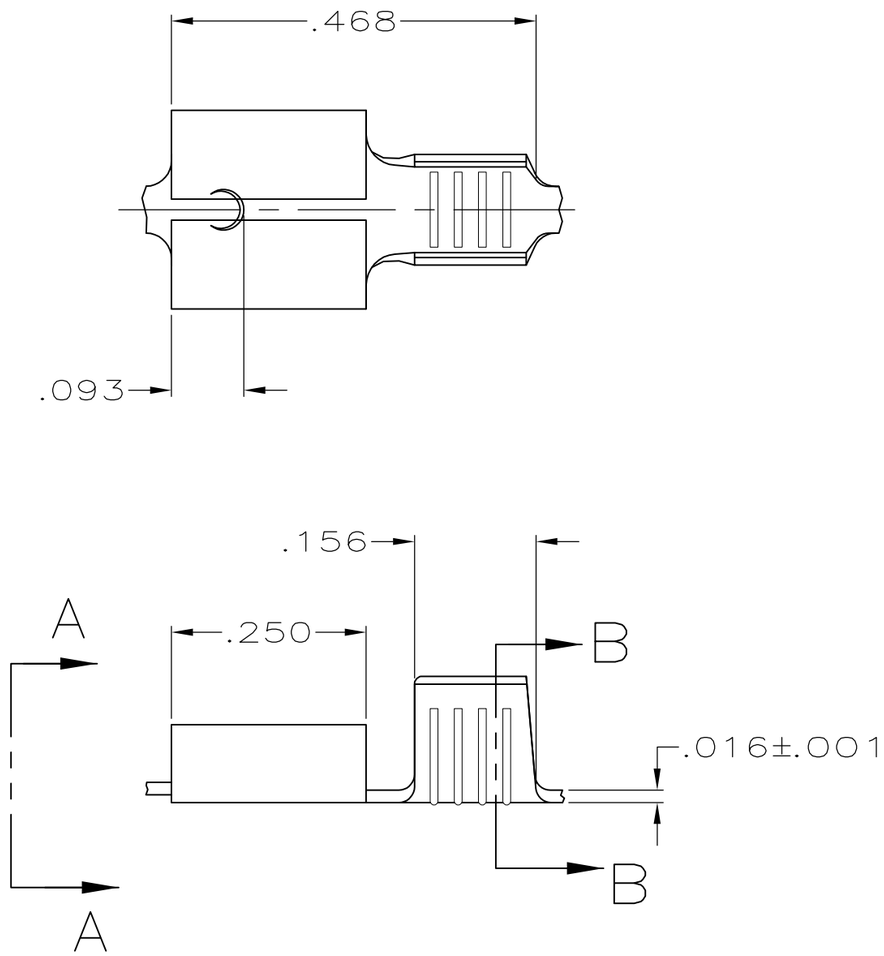

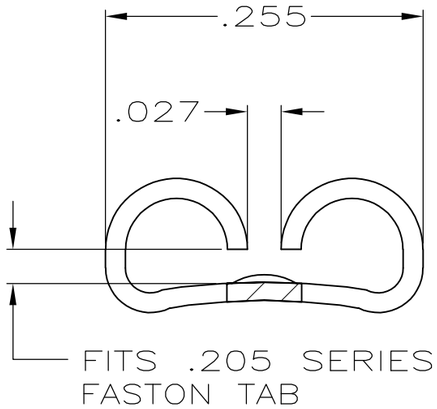

VIEW A—A
SCALE 8:1

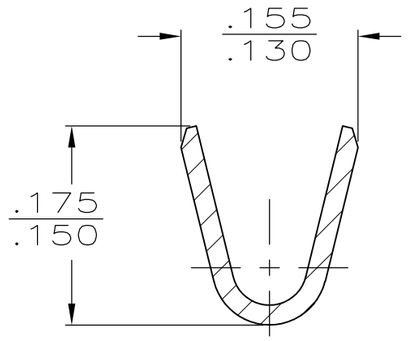

SECTION B—B
SCALE 8:1

18-14	.032	41509
WIRE SIZE	MATING TAB THK ±.001	PART NO

THIS DRAWING IS A CONTROLLED DOCUMENT.

DIMENSIONS: INCHES

TOLERANCES UNLESS OTHERWISE SPECIFIED:

0 PLC	± -
1 PLC	± -
2 PLC	± -
3 PLC	± .015
4 PLC	± -
ANGLES	± -

MATERIAL: BRASS

FINISH: TIN

DWN	JR RUTH	6/14/91
CHK	MS FEHER	6/14/91
APVD	C MEYERS	6/14/91
PRODUCT SPEC	—	
APPLICATION SPEC	—	
WEIGHT	—	

CUSTOMER DRAWING

TE Connectivity

NAME: RECEPTACLE, FASTON, .205 SERIES

SIZE	CAGE CODE	DRAWING NO	RESTRICTED TO
A3	00779	C-41509	—

SCALE	SHEET	REV
5:1	1 OF 1	R