THIS DRAWING IS UNPUBLISHED. RELEASED FOR PUBLICATION
© COPYRIGHT BY TYCO ELECTRONICS CORPORATION. ALL RIGHTS RESERVED.

LOC	DIST
J	

REVISIONS

P	LTR	DESCRIPTION	DATE	DWN	APVD
	C	REVISED FJB0-0267-03	09MAY03	T.T	H.M

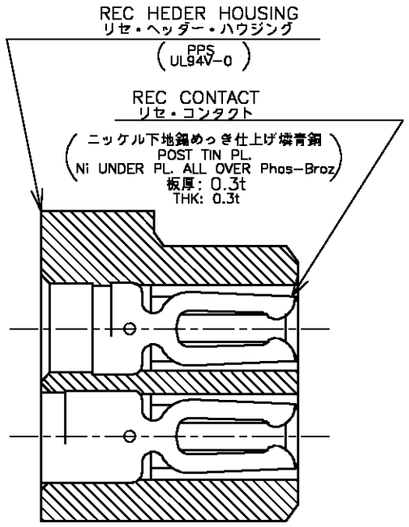

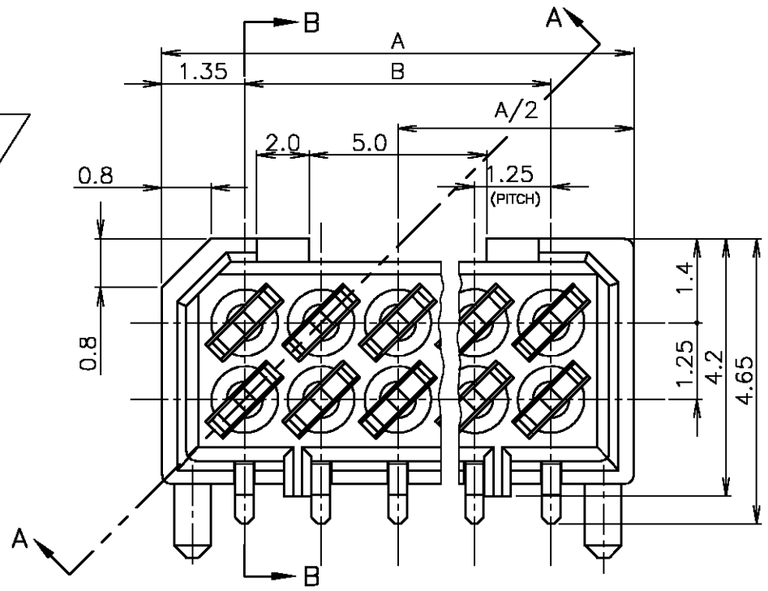

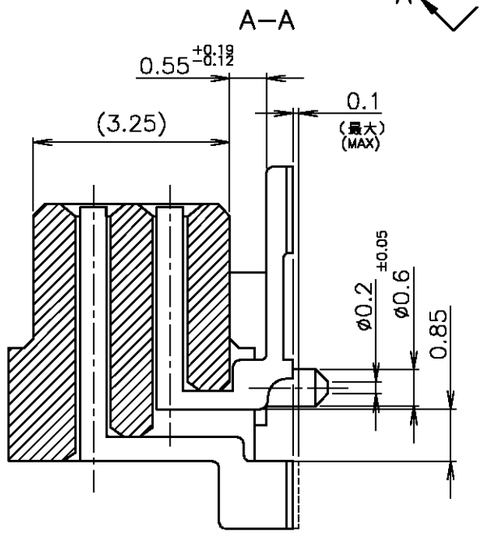

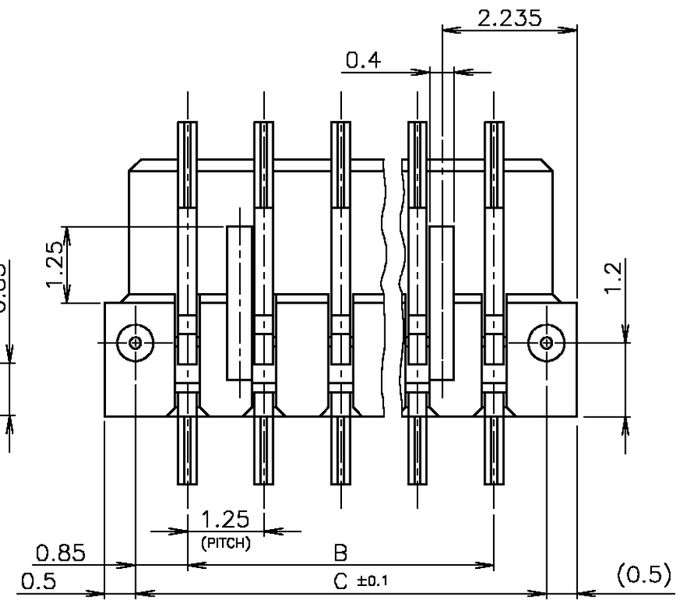

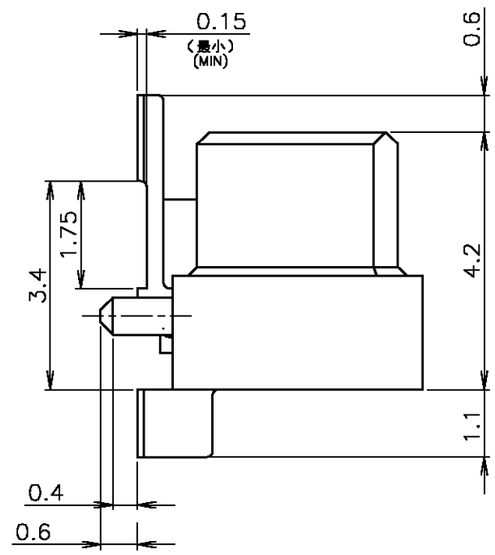

1 嵌合相手製品型番及び、嵌合時寸法は
MATING COUNTER PART NUMBER AND DIMENSIONS
表－1 参照のこと。
AFTER MATING: SEE TABLE 1.

嵌合時寸法: 巾(mm)x高さ(mm)
DIMENSIONS AFTER MATING : WIDE(mm) x HEIGHT(mm)

	MATING COUNTER CONN 嵌合相手側コネクタ POST HDR ASSY 製品型番 P/N	高さ H	REC HDR ASSY SMT H TYPE -IMPROVED TYPE X-176490-X
DIP TYPE	X-176895-X	3.95	4.65 (巾W) x 6.9 (高さH)
DIP TYPE	X-176320-X	8.85	4.65 (巾W) x 11.9 (高さH)
DIP TYPE	X-176871-X	9.85	4.65 (巾W) x 12.9 (高さH)
SMT TYPE	ボス無 WITHOUT BOSS X-176140-X ボス付 WITH BOSS X-176769-X	3.95	5.6 (巾W) x 6.9 (高さH)
SMT TYPE	ボス無 WITHOUT BOSS X-176140-X ボス付 WITH BOSS X-176769-X	8.85	7.0 (巾W) x 11.9 (高さH)

TABLE 1 SMT TYPEは、巾及び高さ寸法に
SMT TYPE INCLUDE DIMENSIONS
半田付タイン部寸法を含みます。
OF SOLDER DIP TINE.

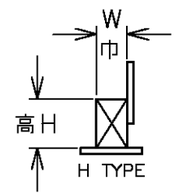

鉛フリー
LEAD FREE

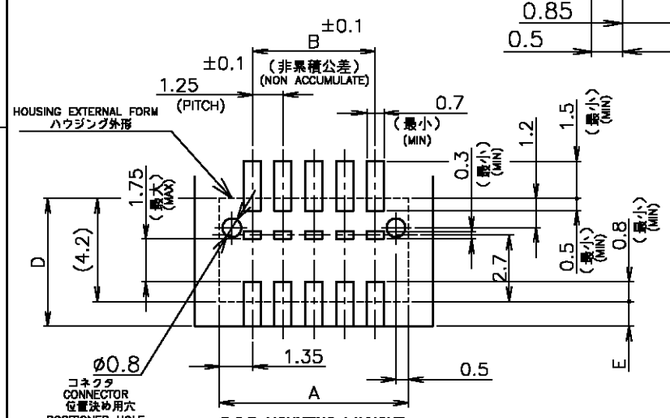

P.C.B MOUNTING LAYOUT
基板加工寸法
(適用基板厚: 0.6mm最小)
(APPLICABLE P.C.B THK : 0.6mm MIN)

1.0	5.2	SMT TYPE
1.0~1.6	5.2~5.8	DIP TYPE
E	D	嵌合相手 MATING COUNTER
寸法 DIMENSIONS		POST HDR

	19.20	17.50	20.20
墨色 BLACK	16.70	15.00	17.70
色別 COLOR	C	B	A

30	6- -0
26	5-176490-6
極数 Pos.	型番 P/N

THIS DRAWING IS A CONTROLLED DOCUMENT.

DIMENSIONS: MM

TOLERANCES UNLESS OTHERWISE SPECIFIED:
0 PLC ±
1 PLC ±
2 PLC ±
3 PLC ±
4 PLC ±
ANGLES ±
10%未満 : ±0.2
10%以上 30%未満 : ±0.25
30%以上 100%未満 : ±0.3
角度 : ±3°

MATERIAL: AS SHOWN 図中参照

FINISH: AS SHOWN 図中参照

DWN F.SAKURAI 10FEB89
CHK J.TANIGAWA 10FEB98
APVD S.KUBOUCHI 10FEB98
PRODUCT SPEC 108-5246
APPLICATION SPEC
WEIGHT

tyco Electronics
Tyco Electronics AMP K.K.
Kawasaki,Japan

NAME
1.25 F-P CONNECTOR (B-TO-B)
DOUBLE ROW REC HDR ASSY (H) SMT TYPE
WITH BOSS - IMPROVED TYPE

SIZE	CAGE CODE	DRAWING NO	RESTRICTED TO
A3	00779	C-176490	—

CUSTOMER DRAWING | SCALE 10:1 | SHEET 1 OF 1 | REV C

AMP 1470-19 REV 31MAR2000

07JAN03 8:30am FJ0T0102