MATERIALS AND FINISHES:

BODY: BERYLLIUM COPPER
PLATED: GOLD (30 MICROINCHES MIN)

CONTACT: BERYLLIUM COPPER
PLATED: GOLD (30 MICROINCHES MIN)

CLIP RING, CAP: BRASS
PLATED: GOLD (30 MICROINCHES MIN)

INSULATOR: PTFE

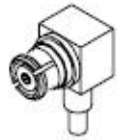

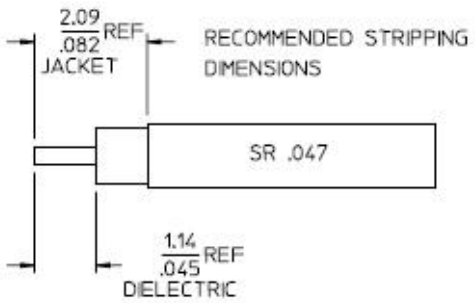

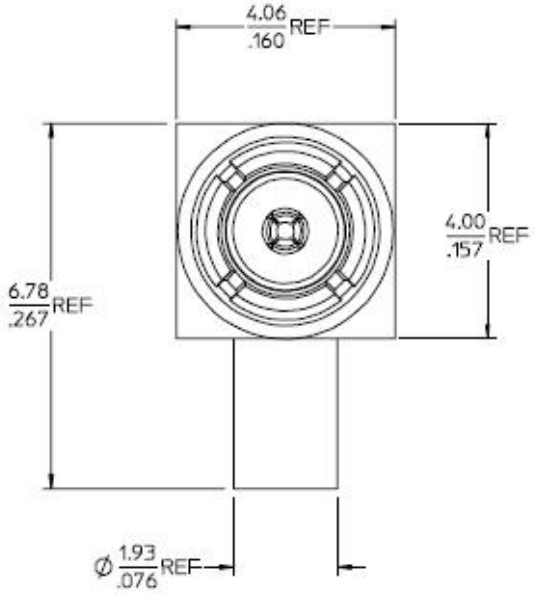

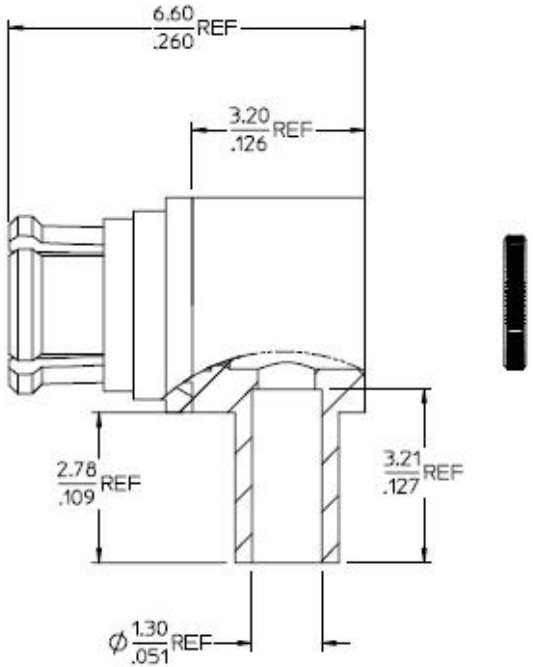

PART NO.	DESCRIPTION
73415-5122	1 PLACE 73415-5120 IN SMALL TRAY
73415-5121	1 PLACE 73415-5120 IN BAG
73415-5120	AS SHOWN

SPECIFICATION	DESCRIPTION
MIL-STD-348A, FIG. 326.1	SMP INTERFACE

REV	DESCRIPTION
CHG: ADDED -5122	
EC NO: URF2007-0311	2007/02/05
DRAWN: CLLI	2007/02/06
CHKD:	2007/02/06
APPR: HUANG	2007/02/06

A3

QUALITY SYMBOLS: ▼=0 ▽=0

GENERAL TOLERANCES (UNLESS SPECIFIED)

	mm	INCH
4 PLACES	± ---	± ---
3 PLACES	± ---	± ---
2 PLACES	± ---	± ---
1 PLACE	± ---	± ---
ANGULAR ± 2 °		

DRAFT WHERE APPLICABLE MUST REMAIN WITHIN DIMENSIONS

DIMENSION STYLE: MM/IN
SCALE:
DESIGN UNITS: METRIC
THIRD ANGLE PROJECTION

		DATE
DRAWN BY	SSS	2004/09/23
CHECKED BY	TEF	2004/09/23
APPROVED BY	GMH	2004/09/23

TITLE: SMP JACK, R/A, SR047 50 OHMS, EWR2582 SMP-JC

molex MOLEX INCORPORATED

MATERIAL NO.: SEE TABLE
DOCUMENT NO.: SD-73415-512
SHEET NO.: 1 OF 1
SIZE: C

THIS DRAWING CONTAINS INFORMATION THAT IS PROPRIETARY TO MOLEX INCORPORATED AND SHOULD NOT BE USED WITHOUT WRITTEN PERMISSION