ISD1700
Series

Multi-Message
Single-Chip
Voice Record & Playback Devices

TABLE OF CONTENTS

1 GENERAL DESCRIPTION 3
2 FEATURES 4
3 BLOCK DIAGRAM 5
4 PINOUT CONFIGURATION 6
5 PIN DESCRIPTION 7
6 MODES OF OPERATIONS 8
6.1 Standalone (Push-Button) Mode 8
6.2 SPI Mode 8
7 TIMING DIAGRAMS 8
7.1 Basic Operation 8
7.2 SPI Operation 12
8 ABSOLUTE MAXIMUM RATINGS 13
8.1 Operating Conditions 13
9 ELECTRICAL CHARACTERISTICS 14
9.1 DC Parameters 14
9.2 AC Parameters 15
10 TYPICAL APPLICATION CIRCUITS 16
10.1 Good Audio Design Practices 18
11 PACKAGING 19
11.1 28-Lead 8x13.4mm Plastic Thin Small Outline Package (TSOP) Type 1 - IQC 19
11.2 28-Lead 300-Mil Plastic Small Outline Integrated Circuit (SOIC) 20
11.3 28-Lead 600-Mil Plastic Dual Inline Package (PDIP) 21
12 ORDERING INFORMATION 21
13 VERSION HISTORY 23

1 GENERAL DESCRIPTION

The Nuvoton® ISD1700 ChipCorder® Series is a high quality, fully integrated, single-chip multi-message voice record and playback device ideally suited to a variety of electronic systems. The message duration is user selectable in ranges from 26 seconds to 120 seconds, depending on the specific device. The sampling frequency of each device can also be adjusted from 4 kHz to 12 kHz with an external resistor, giving the user greater flexibility in duration versus recording quality for each application. Operating voltage spans a range from 2.4 V to 5.5 V to ensure that the ISD1700 devices are optimized for a wide range of battery or line-powered applications.

The ISD1700 is designed for operation in either standalone or microcontroller (SPI) mode. The device incorporates a proprietary message management system that allows the chip to self-manage address locations for multiple messages. This unique feature provides sophisticated messaging flexibility in a simple push-button environment. The devices include an on-chip oscillator (with external resistor control), microphone preamplifier with Automatic Gain Control (AGC), an auxiliary analog input, anti-aliasing filter, Multi-Level Storage (MLS) array, smoothing filter, volume control, Pulse Width Modulation (PWM) Class D speaker driver, and current/voltage output.

The ISD1700 devices also support an optional “vAlert” (voiceAlert) feature that can be used as a new message indicator. With vAlert, the device flashes an external LED to indicate that a new message is present. Besides, four special sound effects are reserved for audio confirmation of operations, such as “Start Record”, “Stop Record”, “Erase”, “Forward”, “Global Erase”, and etc.

Recordings are stored into on-chip Flash memory, providing zero-power message storage. This unique single-chip solution is made possible through Nuvoton’s patented Multi-Level Storage (MLS) technology. Audio data are stored directly in solid-state memory without digital compression, providing superior quality voice and music reproduction.

Voice signals can be fed into the chip through two independent paths: a differential microphone input and a single-ended analog input. For outputs, the ISD1700 provides a Pulse Width Modulation (PWM) Class D speaker driver and a separate analog output simultaneously. The PWM can directly drive a standard 8Ω speaker or typical buzzer, while the separate analog output can be configured as a single-ended current or voltage output to drive an external amplifier.

While in Standalone mode, the ISD1700 devices automatically enter into power down mode for power conservation after an operation is completed.

In the SPI mode, the user has full control via the serial interface in operating the device. This includes random access to any location inside the memory array by specifying the start address and end address of operations. SPI mode also allows access to the Analog Path Configuration (APC) register. This register allows flexible configuration of audio paths, inputs, outputs and mixing. The APC default configuration for standalone mode can also be modified by storing the APC data into a non-volatile register (NVCFG) that is loaded at initialization. Utilizing the capabilities of ISD1700 Series, designers have the control and flexibility to implement voice functionality into the high-end products.

Notice: The specifications are subject to change without notice. Please contact Nuvoton Sales Offices or Representatives to verify current or future specifications. Also refer to the website for any related application notes.

2 FEATURES

- Integrated message management systems for single-chip, push-button applications
  - **$\overline{\text{REC}}$**: level-trigger for recording
  - **$\overline{\text{PLAY}}$**: edge-trigger for individual message or level-trigger for looping playback sequentially
  - **$\overline{\text{ERASE}}$**: edge-triggered erase for first or last message or level-triggered erase for all messages
  - **$\overline{\text{FWD}}$**: edge-trigger to advance to the next message or fast message scan during the playback
  - **$\overline{\text{VOL}}$** : 8 levels output volume control
  - RDY/$\overline{\text{INT}}$: ready or busy status indication
  - **$\overline{\text{RESET}}$** : return to the default state
  - Automatic power-down after each operation cycle
- Selectable sampling frequency controlled by an external oscillator resistor

Sampling Frequency	12 kHz	8 kHz	6.4 kHz	5.3 kHz	4 kHz
Rosc	53 kΩ	80 kΩ	100 kΩ	120 kΩ	160 kΩ

- Selectable message duration
  - A wide range selection from 20 secs to 480 secs pending upon sampling frequency chosen

Sample Freq.	ISD1730	ISD1760	ISD17120	ISD17240
12 kHz	20 secs	40 secs	80 secs	160 secs
8 kHz	30 secs	60 secs	120 secs	240 secs
6.4 kHz	37 secs	75 secs	150 secs	300 secs
5.3 kHz	45 secs	90 secs	181 secs	362 secs
4 kHz	60 secs	120 secs	240 secs	480 secs

- Message and operation indicators
  - Four customizable Sound Effects (SEs) for audible indication
  - Optional vAlert (voiceAlert) to indicate the presence of new messages
  - LED: stay on during recording, blink during playback, forward and erase operations
- Dual operating modes
  - *Standalone mode:*
    - Integrated message management techniques
    - Automatic power-down after each operation cycle
  - *SPI mode:*
    - Fully user selectable and controllable options via APC register and various SPI commands
- Two individual input channels
  - MIC+/MIC-: differential microphone inputs with AGC (Automatic Gain Control)
  - AnaIn: single-ended auxiliary analog input for recording or feed-through
- Dual output channels
  - Differential PWM Class D speaker outputs directly drives an 8 Ω speaker or a typical buzzer
  - Configurable AUD (current) or AUX (voltage) single-ended output drives external audio amplifier
- ChipCorder standard features
  - High-quality, natural voice and audio reproduction
  - 2.4V to 5.5V operating voltage
  - 100-year message retention (typical)

- o 100,000 record cycles (typical)
- Temperature options:
  - o Commercial: 0°C to +50°C (die); 0°C to +70°C (packaged units)
  - o Industrial: -40°C to +85°C (packaged units)
- Packaging types: available in die, PDIP, SOIC and TSOP
- Package option: Lead-free packaged units

3 BLOCK DIAGRAM

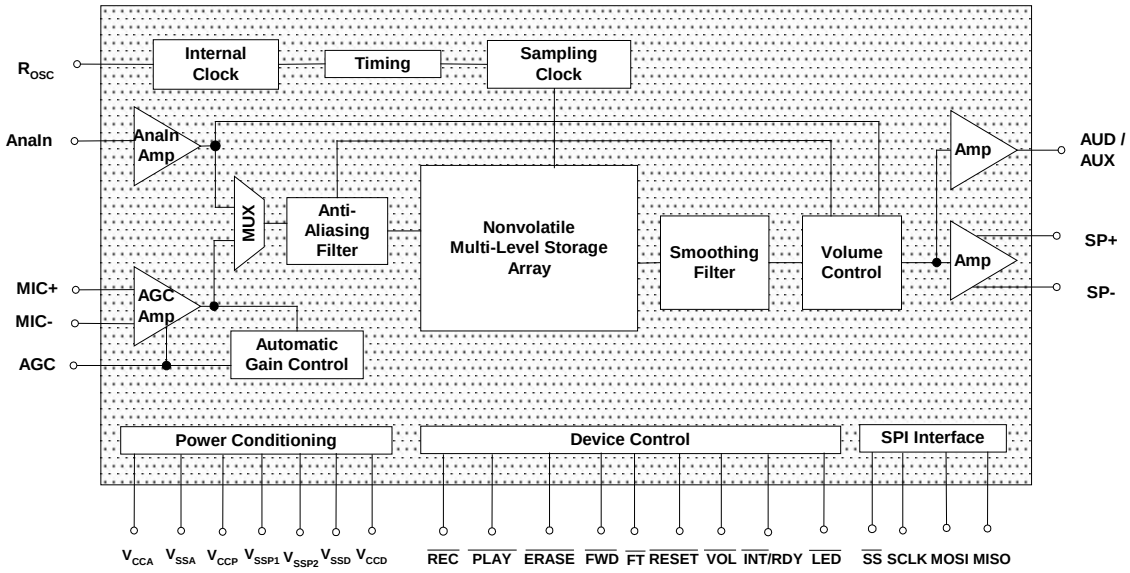

4 PINOUT CONFIGURATION

Refer to Design Guide for details before performing any design or PCB layout.

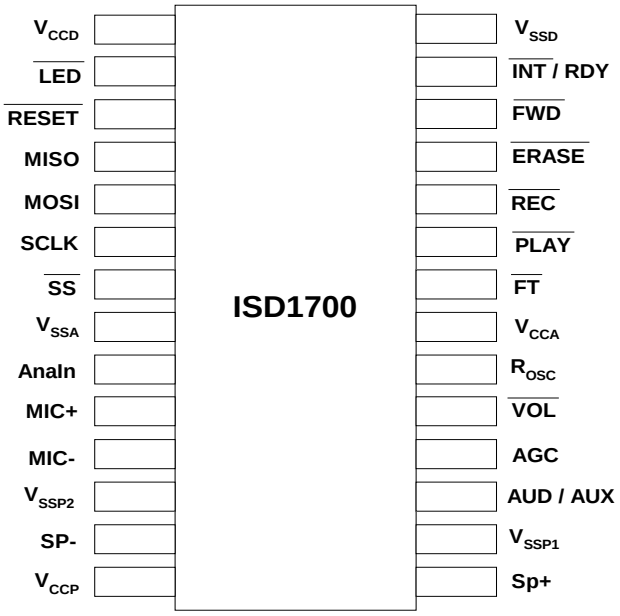

SOIC / PDIP

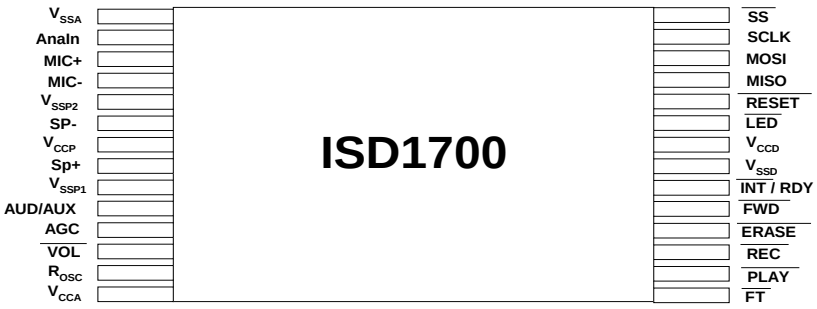

TSOP

5 PIN DESCRIPTION

Refer to Design Guide for details before performing any design or PCB layout.

PIN NAME	FUNCTIONS
V_{CCD}	**Digital Power Supply**: Power supply for digital circuitry.
$\overline{\text{LED}}$	**LED**: An LED output.
$\overline{\text{RESET}}$	**RESET**: When active, the device enters into a known state.
MISO	**Master In Slave Out:** Data is shifted out on the falling edge of SCLK. When the SPI is inactive ($\overline{\text{SS}}$ = high), it's tri-state.
MOSI	**Master Out Slave In:** Data input of the SPI interface when ISD1700 is a slave. Data is latched into the device on the rising edge of SCLK.
SCLK	**Serial Clock:** Clock of the SPI interface.
$\overline{\text{SS}}$	**Slave Select:** Selects as a slave device and enables the SPI interface.
V_{SSA}	**Analog Ground**: Ground path for analog circuitry.
AnaIn	**AnaIn:** Auxiliary analog input to the device for recording or feed-through.
MIC+	**MIC+:** Non-inverting input of the differential microphone signal.
MIC-	**MIC-:** Inverting input of the differential microphone signal.
V_{SSP2}	**Ground**: Ground path for negative PWM speaker drive.
SP-	**SP-**: The negative Class D PWM speaker output.
V_{CCP}	**Power Supply for PWM Speaker Driver**: Power for PWM speaker drive.
SP+	**SP+:** The positive Class D PWM speaker output.
V_{SSP1}	**Ground**: Ground path for positive PWM speaker drive.
AUD/AUX	**Auxiliary Output**: Either an AUD (current) or AUX (voltage) output.
AGC	**Automatic Gain Control (AGC)**: The AGC adjusts the gain of the microphone preamplifier circuitry.
$\overline{\text{VOL}}$	**Volume:** This control has 8 levels of volume adjustment.
R_{OSC}	**Oscillator Resistor**: A resistor determines the sample frequency of the device, which sets the duration.
V_{CCA}	**Analog Power Supply**. Power supply for analog circuitry.
$\overline{\text{FT}}$	**Feed-through:** Enable the feed-through path for AnaIn signal to the outputs.
$\overline{\text{PLAY}}$	**Playback:** Plays the recorded message individually, or plays messages sequential in a looping mode.
$\overline{\text{REC}}$	**Record:** When active, starts recording message.
$\overline{\text{ERASE}}$	**Erase:** When active, can erase individual message or do global erase.
$\overline{\text{FWD}}$	**Forward:** Advances to the next message from the current location.
RDY/$\overline{\text{INT}}$	An open drain output. Can review ready or interrupt status.
V_{SSD}	**Digital Ground**: Ground path for digital circuitry

6 MODES OF OPERATIONS

The ISD1700 Series can operate in either Standalone (Push-Button) or microcontroller (SPI) mode.

6.1 STANDALONE (PUSH-BUTTON) MODE

One can utilize the **$\overline{\text{REC}}$**, **$\overline{\text{PLAY}}$**, **$\overline{\text{FT}}$**, **$\overline{\text{FWD}}$**, **$\overline{\text{ERASE}}$**, **$\overline{\text{VOL}}$** or **$\overline{\text{RESET}}$** control to initiate a desired operation. As completed, the device automatically enters into the power-down state.

6.2 SPI MODE

In SPI mode, control of the device is achieved through the 4-wire serial interface via SPI commands.

For technical details, please refer to the design guide.

7 TIMING DIAGRAMS

The following estimated timing diagrams are not in proper scale.

7.1 BASIC OPERATION

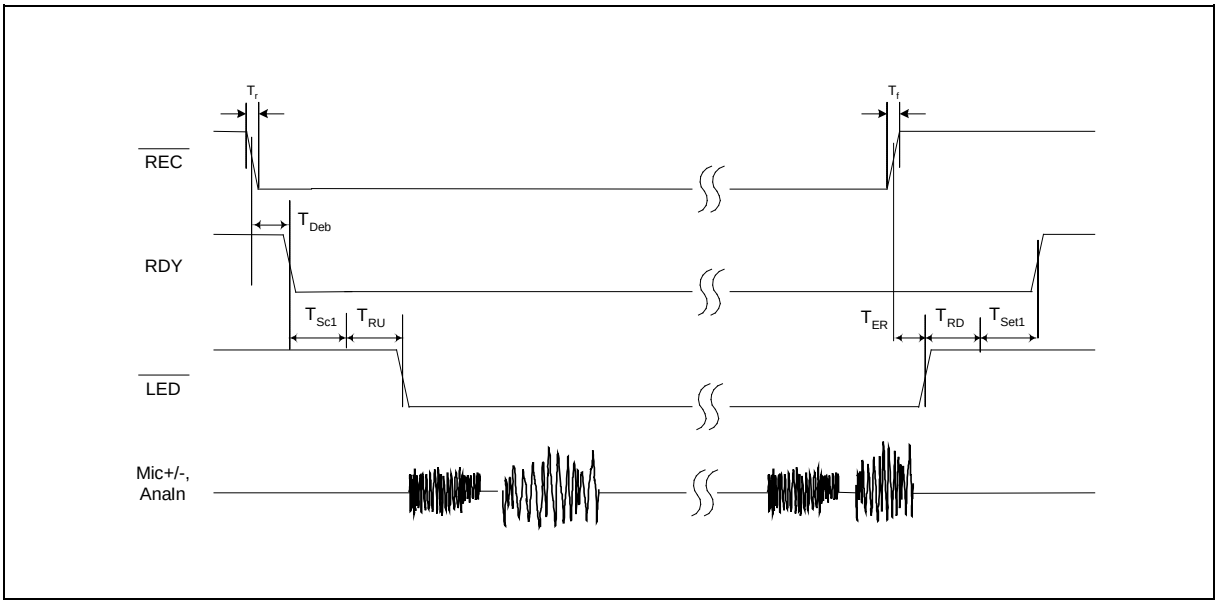

Figure 12.1: Record Operation with No Sound Effect

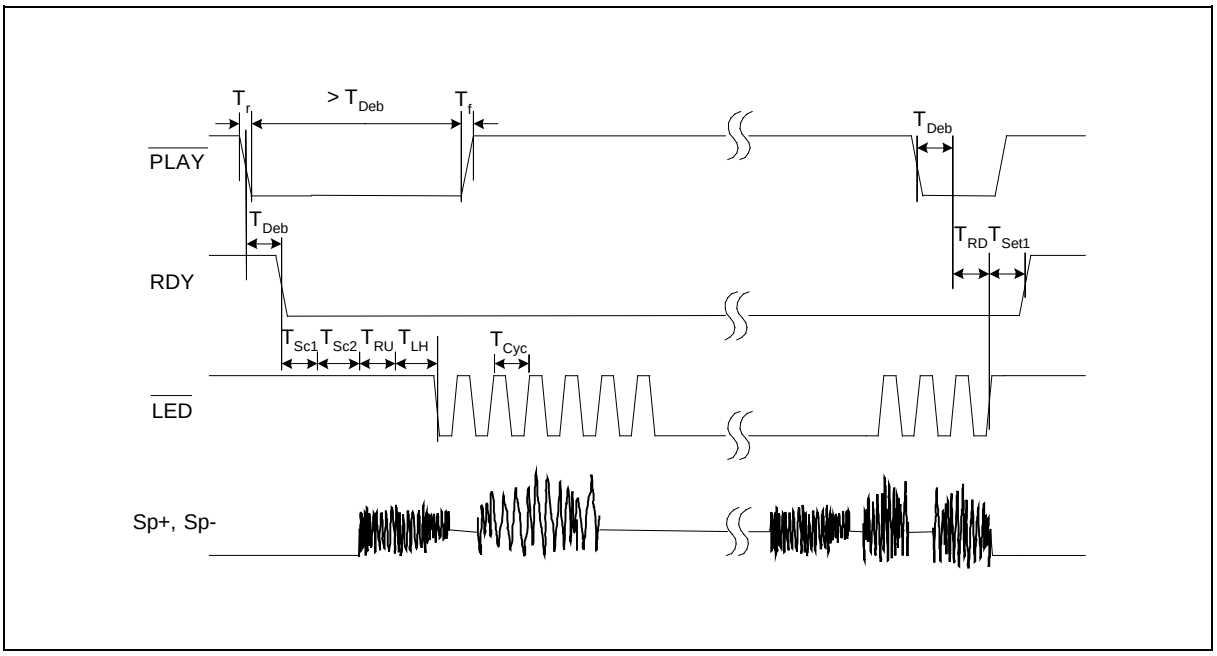

Figure 12.2: Start and Stop Playback Operation

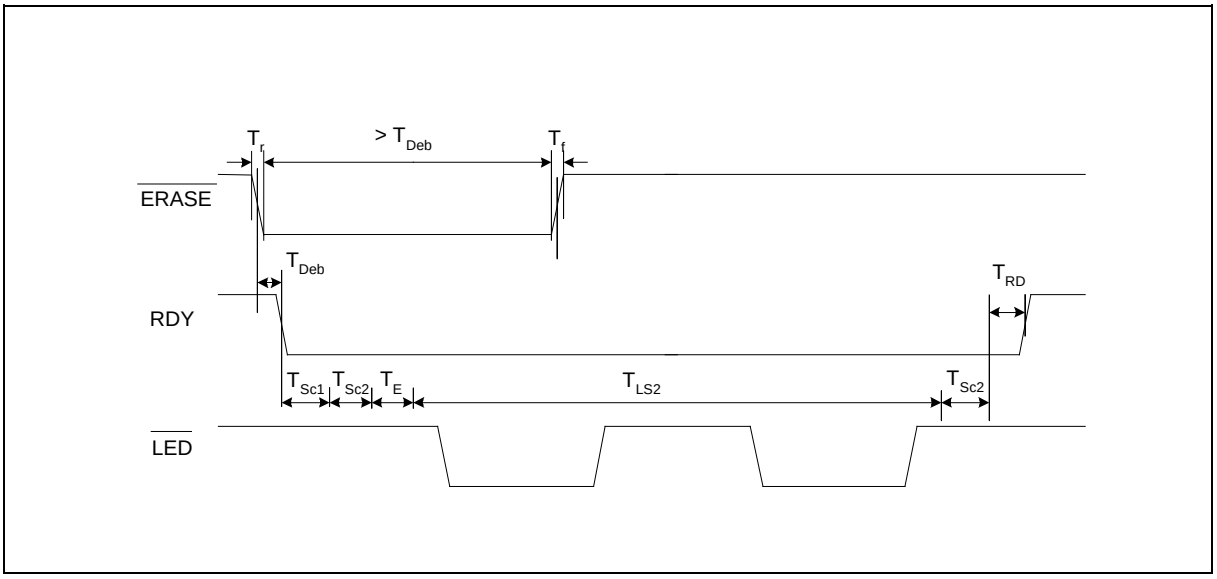

Figure 12.3: Single Erase Operation with No Sound Effect

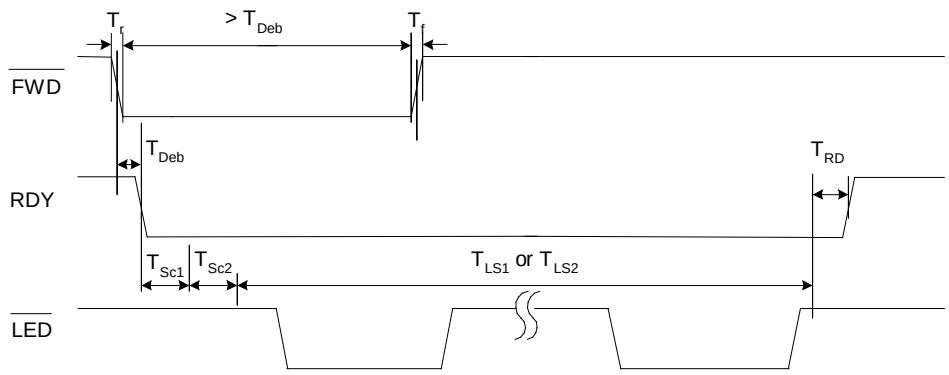

Figure 12.4: Forward Operation with No Sound Effect

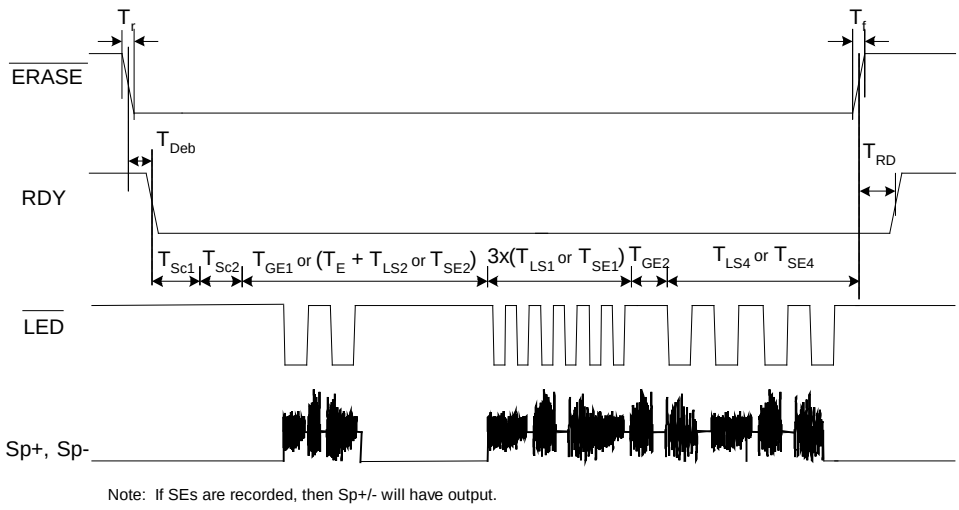

Note: If SEs are recorded, then Sp+/- will have output.

Figure 12.5: Global Erase Operation with or without Sound Effects

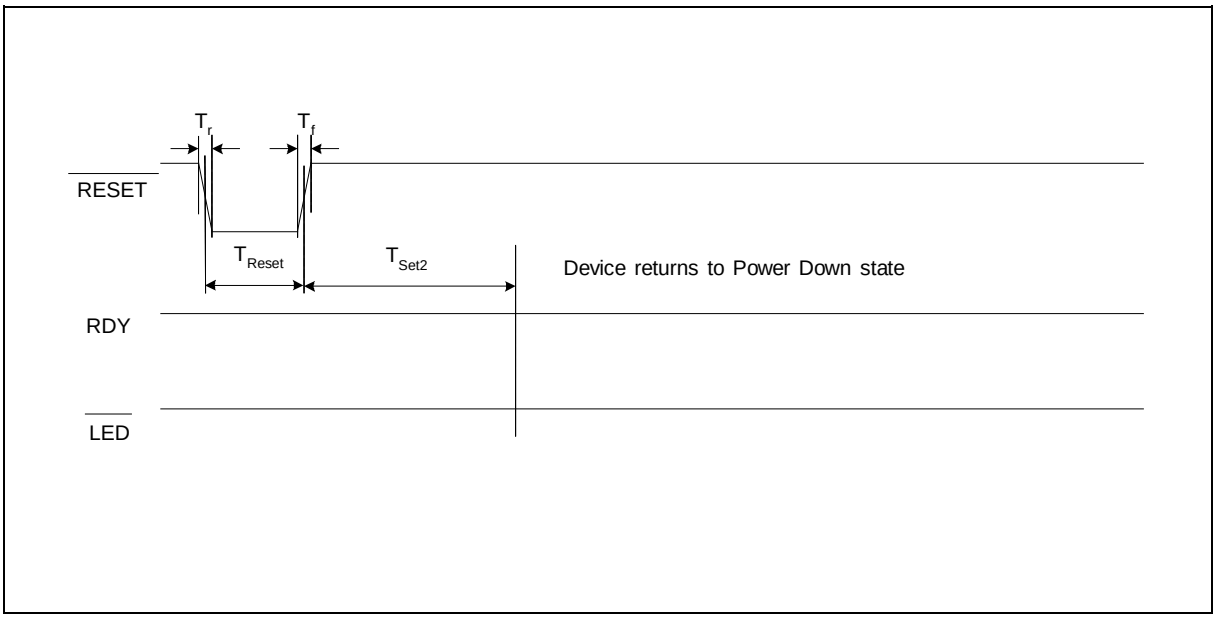

Figure 12.6: Reset Operation

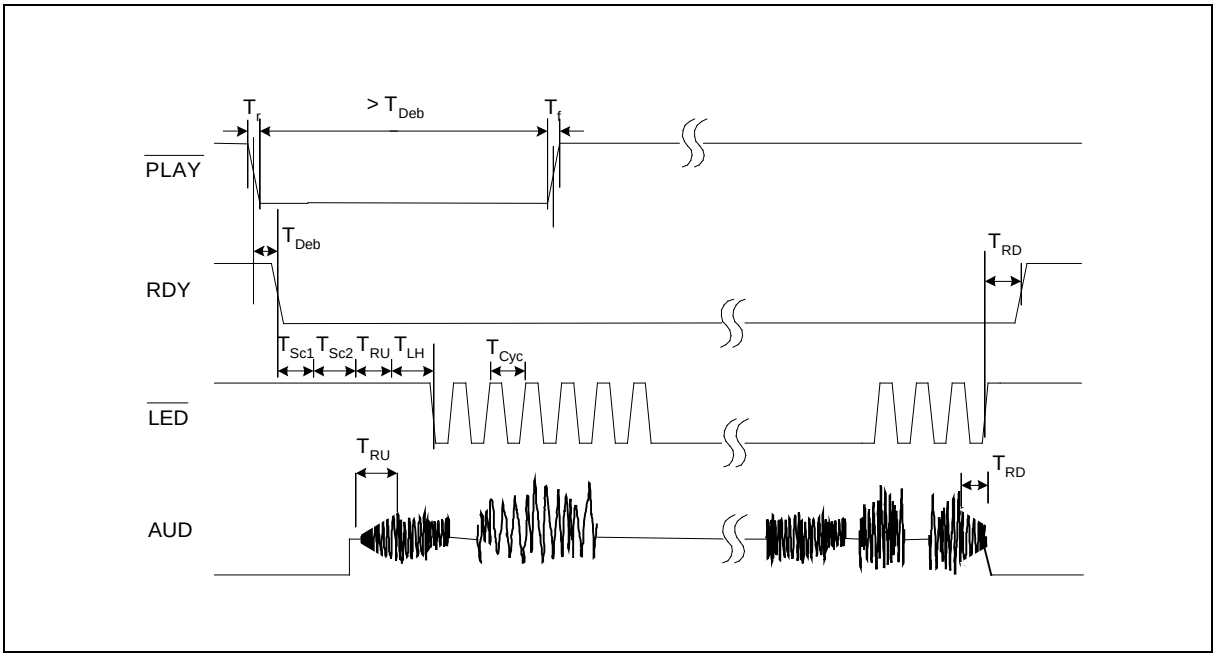

Figure 12.7: Playback Operation with ramp up and ramp down effect at AUD output

7.2 SPI OPERATION

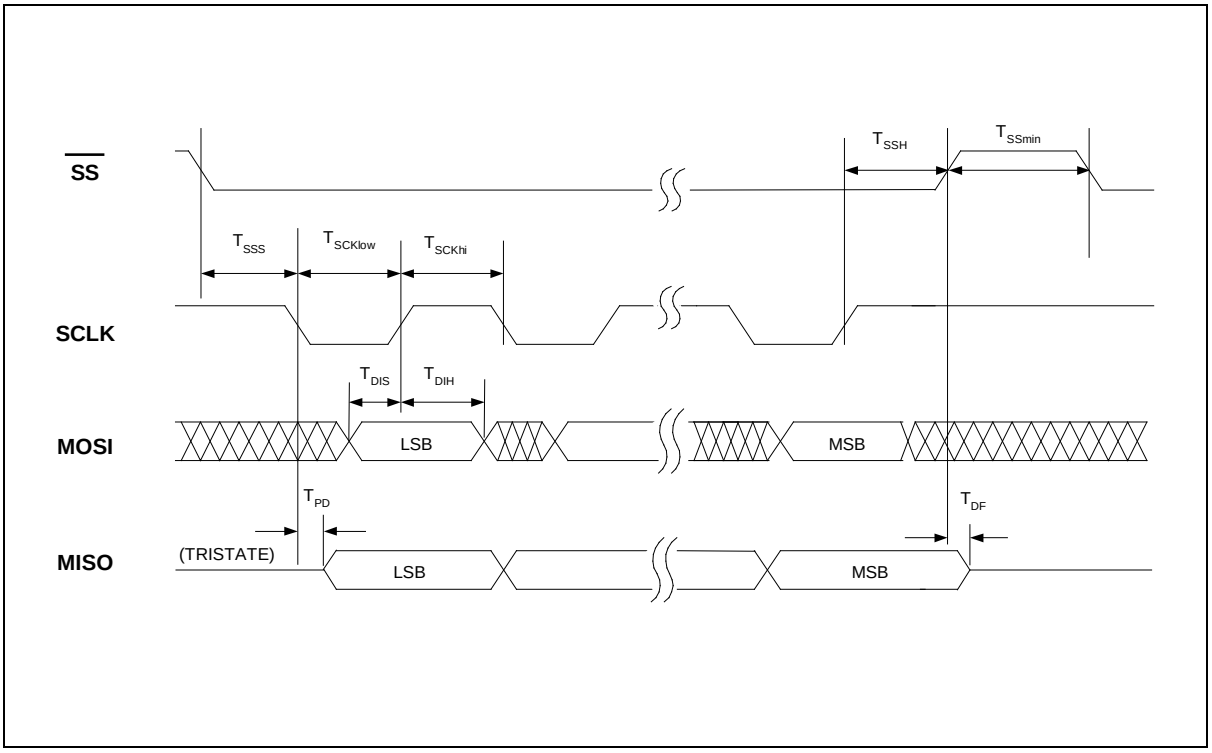

Figure 12.8: SPI Operation

PARAMETER	SYMBOL	MIN	TYP	MAX	UNITS
$\overline{SS}$ Setup Time	T_{SSS}	500			nsec
$\overline{SS}$ Hold Time	T_{SSH}	500			nsec
Data in Setup Time	T_{DIS}	200			nsec
Data in Hold Time	T_{DIH}	200			nsec
Output Delay	T_{PD}			500	nsec
Output Delay to HighZ	T_{DF}			500	nsec
$\overline{SS}$ HIGH	T_{SSmin}	1			µsec
SCLK High Time	T_{SCKhi}	400			nsec
SCLK Low Time	T_{SCKlow}	400			nsec
CLK Frequency	F_0			1,000	KHz
Power-Up Delay [1]	T_{PUD}		50		msec

Notes: [1] The value shown is based upon 8 kHz sampling frequency. Delay increases proportionally for slower sampling frequency.

8 ABSOLUTE MAXIMUM RATINGS

ABSOLUTE MAXIMUM RATINGS (DIE) [1]

CONDITIONS	VALUES
Junction temperature	150^0C
Storage temperature range	-65^0C to $+150^0$C
Voltage Applied to any pads	(V_{SS} - 0.3V) to (V_{CC} + 0.3V)
Power supply voltage to ground potential	-0.3V to +7.0V

ABSOLUTE MAXIMUM RATINGS (PACKAGED PARTS) [1]

CONDITIONS	VALUES
Junction temperature	150^0C
Storage temperature range	-65^0C to $+150^0$C
Voltage Applied to any pins	(V_{SS} - 0.3V) to (V_{CC} + 0.3V)
Voltage applied to any pin (Input current limited to +/-20 mA)	(V_{SS} – 1.0V) to (V_{CC} + 1.0V)
Power supply voltage to ground potential	-0.3V to +7.0V

[1] *Stresses above those listed may cause permanent damage to the device. Exposure to the absolute maximum ratings may affect device reliability. Functional operation is not implied at these conditions.*

8.1 OPERATING CONDITIONS

OPERATING CONDITIONS (DIE)

CONDITIONS	VALUES
Operating temperature range	0°C to +50°C
Supply voltage (V_{CC}) [1]	+2.4 V to +5.5 V
Ground voltage (V_{SS}) [2]	0 V
Input voltage (V_{CC}) [1]	0 V to 5.5 V
Voltage applied to any pins	(V_{SS} –0.3 V) to (V_{CC} +0.3 V)

OPERATING CONDITIONS (PACKAGED PARTS)

CONDITIONS	VALUES
Operating temperature range (Case temperature)	-40°C to +85°C
Supply voltage (V_{DD}) [1]	+2.4V to +5.5V
Ground voltage (V_{SS}) [2]	0V
Input voltage (V_{DD}) [1]	0V to 5.5V
Voltage applied to any pins	(V_{SS} –0.3V) to (V_{DD} +0.3V)

[1] $V_{CC} = V_{CCA} = V_{CCD} = V_{CCP}$

[2] $V_{SS} = V_{SSA} = V_{SSD} = V_{SSP1}$ V_{SSP2}

9 ELECTRICAL CHARACTERISTICS

9.1 DC PARAMETERS

PARAMETER	SYMBOL	MIN	TYP [1]	MAX	UNITS	CONDITIONS
Supply Voltage	V_{DD}	2.4		5.5	V	
Input Low Voltage	V_{IL}	V_{SS}-0.3		0.3xV_{DD}	V	
Input High Voltage	V_{IH}	0.7xV_{DD}		V_{DD}	V	
Output Low Voltage	V_{OL}	V_{SS}-0.3		0.3xV_{DD}	V	I_{OL} = 4.0 mA[2]
Output High Voltage	V_{OH}	0.7xV_{DD}		V_{DD}	V	I_{OH} = -1.6 mA[2]
Record Current	I_{DD_Record}		20		mA	V_{DD} = 5.5 V, No load, Sampling freq = 12 kHz
Playback Current	$I_{DD_Playback}$		20		mA	
Erase Current	I_{DD_Erase}		20		mA	
Standby Current	I_{SB}		1	10	µA	[3] [4]
Input Leakage Current	I_{ILPD1}			±1	µA	Force V_{DD}
Input Current Low	I_{ILPD2}	-3		-10	µA	Force V_{SS} , others at Vcc
Preamp Input Impedance	R_{MIC+},R_{MIC-}		7		kΩ	Power-up AGC
AnaIn Input Impedance	R_{AnaIn}		42		kΩ	When active
MIC Differential Input	V_{IN1}	15		300	mV	Peak-to-Peak[5]
AnaIn Input Voltage	V_{IN2}			1	V	Peak-to-Peak
Gain from MIC to SP+/-	A_{MSP}	6		40	dB	V_{IN} = 15~300 mV, AGC = 4.7 µF, V_{CC} = 2.4V~5.5V
Speaker Output Load	R_{SPK}	8			Ω	Across both Speaker pins
AUX Output Load	R_{Aux}	5			kΩ	When active
Speaker Output Power	Pout		670		mW	V_{DD} = 5.5 V; 1Vp-p, 1 kHz sine wave at AnaIn. R_{SPK} = 8 Ω.
			313		mW	V_{DD} = 4.4 V
			117		mW	V_{DD}= 3 V
			49		mW	V_{DD}= 2.4 V
Speaker Output Voltage	V_{OUT1}		V_{DD}		V	R_{SPK} = 8Ω (Speaker), Typical buzzer
AUX Output Swing	V_{OUT2}			1	V	Peak-to-Peak
AUX Output DC Level	V_{OUT3}		1.2		V	When active
AUD	I_{AUD}		-3.0		mA	V_{DD} =4.5 V, R_{EXT}= 390 Ω
Volume Output	A_{Vol}		0 to -28		dB	8 steps of 4dB each reference to output
Total Harmonic Distortion	THD		1		%	15 mV p-p 1 kHz sine wave, Cmessage weighted

Notes:
[1] Conditions: V_{CC} = 4.5V, 8 kHz sampling frequency and T_A = 25°C, unless otherwise stated.
[2] LED output during Record operation.
[3] V_{CCA}, V_{CCD} and V_{CCP} are connected together. V_{SSA}, V_{SSP1}, V_{SSP2} and V_{SSD} are connected together.
[4] **$\overline{\text{REC}}$**, **$\overline{\text{PLAY}}$**, **$\overline{\text{FT}}$**, **$\overline{\text{FWD}}$**, **$\overline{\text{ERASE}}$**, **$\overline{\text{VOL}}$** and **$\overline{\text{RESET}}$** must be at V_{CCD}.
[5] Balanced input signal applied between MIC+ and MIC- as shown in the applications example. Single-ended MIC+ or MIC- input is recommended no more than 150 mV p-p.

9.2 AC PARAMETERS

CHARACTERISTIC	SYMBOL	MIN	TYP [1]	MAX	UNITS	CONDITIONS
Sampling Frequency [2]	F_S	4		12	kHz	[2] [4]
Duration [3]	T_{Dur}		Refer to duration table		sec	[3]
Rising Time	T_r			100	nsec	
Falling Time	T_f			100	nsec	
Debounce Time	T_{Deb}	$192/F_S$			msec	[4]
Ramp Up Time	T_{RU}		$128/F_S$		msec	
Ramp Down Time	T_{RD}		$128/F_S$		msec	
Initial Scan Time after power is applied	T_{Sc1}			$DRN/8/F_S$	msec	DRN= device row# [4]
Initial Scan Time from PD state	T_{Sc2}			$DRN/16/F_S$	msec	After a PB operation is run [4]
End Recording Time	T_{ER}			$32/F_S$	msec	[4]
LED High Time	T_{LH}			$0.5K/F_S$	msec	[4]
LED Flash Time for SE1	T_{LS1}		$3.5K/F_S$		sec	SE1 not recorded [5]
LED Flash Time for SE2	T_{LS2}		$7.5K/F_S$		sec	SE2 not recorded [5]
LED Flash Time for SE3	T_{LS3}		$11.5K/F_S$		sec	SE3 not recorded [5]
LED Flash Time for SE4	T_{LS4}		$15.5K/F_S$		sec	SE4 not recorded [5]
SE1 Recorded Duration	T_{SE1}			$4K/F_S$	sec	[4] [5]
SE2 Recorded Duration	T_{SE2}			$4K/F_S$	sec	[4] [5]
SE3 Recorded Duration	T_{SE3}			$4K/F_S$	sec	[4] [5]
SE4 Recorded Duration	T_{SE4}			$4K/F_S$	sec	[4] [5]
Erase Time	T_E		$10MRN/F_S$		sec	MRN=message row # [4]
Global Erase Wait Time	T_{GE1}			$20K/F_S$	sec	[4] [5]
Global Erase Time	T_{GE2}		$34/F_S$		sec	
RESET Pulse	T_{Reset}	1			µsec	All Fs [4]
Settle Time	T_{Set1}			$128/F_S$	msec	[4]
Settle Time after Reset	T_{Set2}			$64/F_S$	msec	[4]
LED Error Time	T_{LErr}			$27.5K/F_S$	msec	[4] [5]
LED Cycle frequency	T_{Cyc}	1		4	Hz	Pending upon F_S

Notes:
[1] Typical values: V_{CC} = 4.5 V, F_S = 8 kHz and @ T_A = 25°C, unless otherwise stated.
[2] Characterization data shows that sampling frequency resolution is ±5 percent across temperature and voltage ranges.
[3] Characterization data shows that duration resolution is ±5 percent across temperature and voltage ranges.
[4] Vcc=2.4 V~5.5V
[5] K = 1024

10 TYPICAL APPLICATION CIRCUITS

The following typical applications examples on ISD1700 Series are for references only. They make no representation or warranty that such applications shall be suitable for the use specified. Each design has to be optimized in its own system for the best performance on voice quality, current consumption, functionalities and etc.

The below notes apply to the following applications examples:

- * These capacitors may be needed in order to optimize for the best voice quality, which is also dependent upon the layout of the PCB. Depending on system requirements, they can be 10 μF, 4.7 μF or other values. Please refer to the applications notes or consult Nuvoton for layout advice.
- ** It is important to have a separate path for each ground and power back to the related terminals to minimize the noise. Also, the power supplies should be decoupled as close to the device as possible.

Example #1: Recording using microphone input via push-button controls

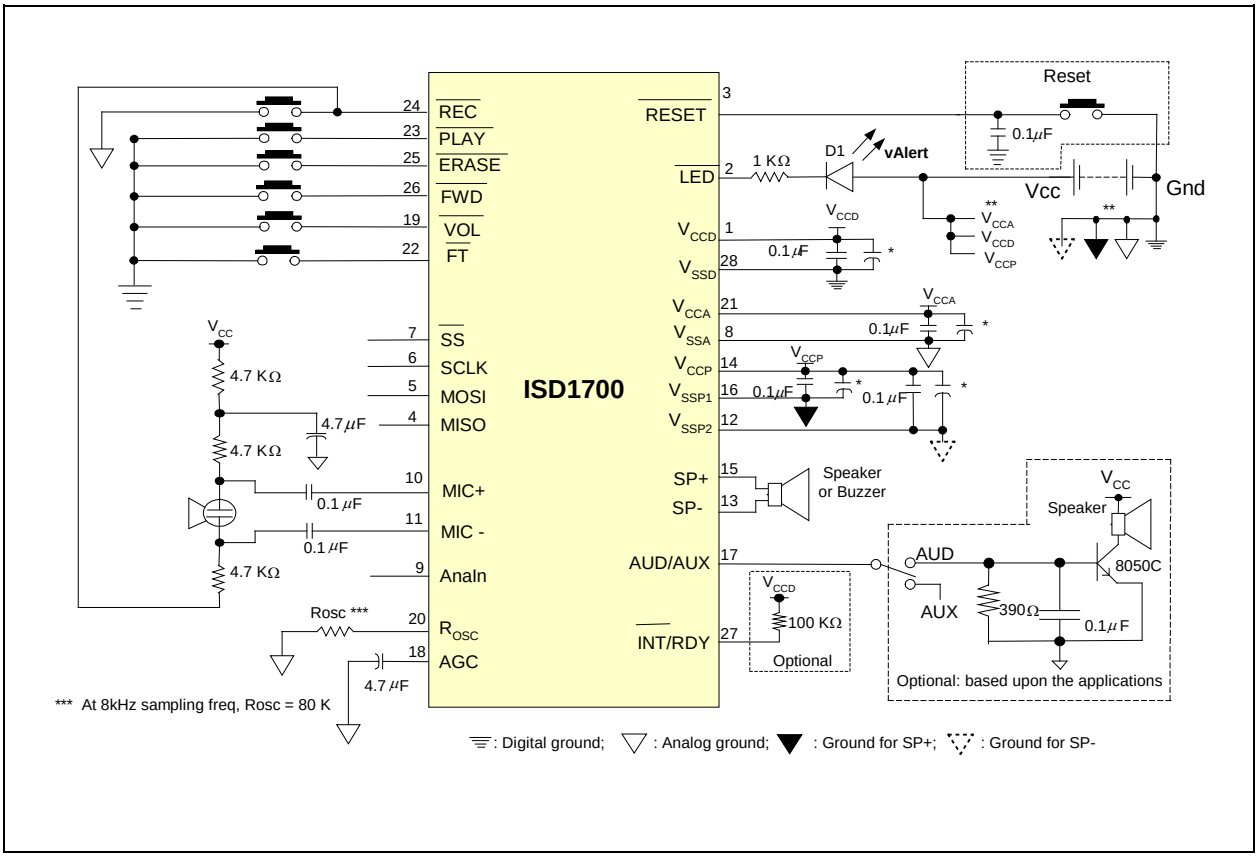

Example #2: Recording using AnaIn input via push-button controls

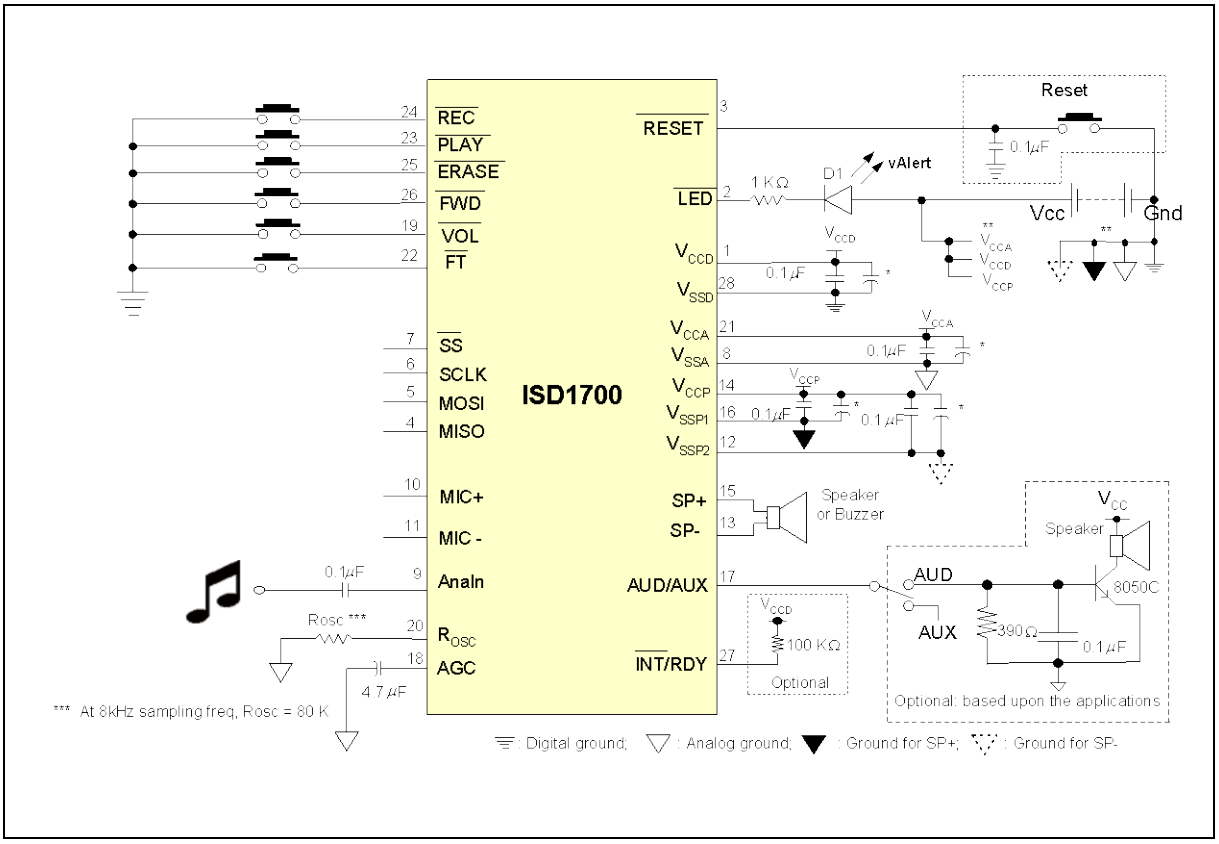

Example #3: Connecting the SPI Interface to a microcontroller

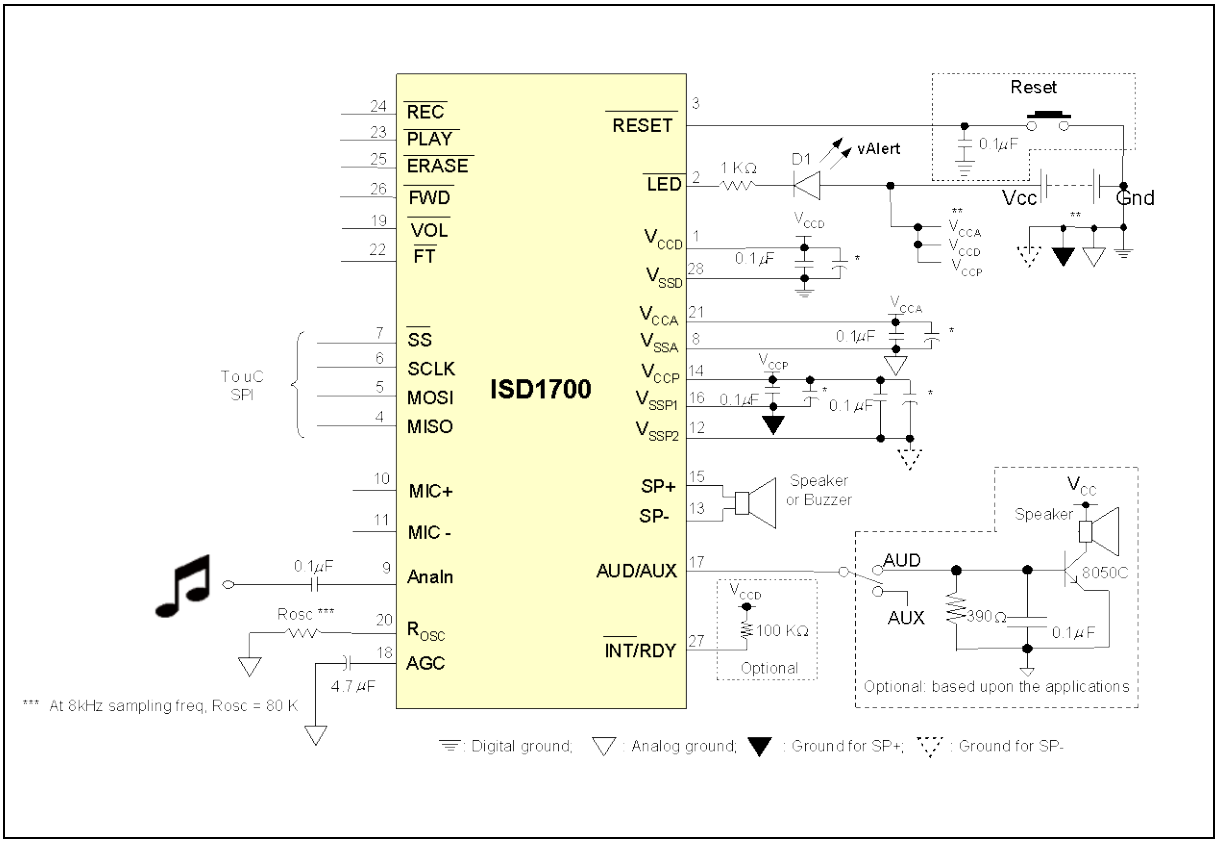

10.1 GOOD AUDIO DESIGN PRACTICES

To ensure the highest quality of voice reproduction, it is important to follow good audio design practices in layout and power supply decoupling. See recommendations from below links or other Application Notes in our websites.

Design Considerations for ISD1700 Family

AN-CC1002 Design Considerations for ISD1700 Family.pdf

Good Audio Design Practices

http://www.Nuvoton-usa.com/products/isd_products/chipcorder/applicationinfo/apin11.pdf

Single-Chip Board Layout Diagrams

http://www.Nuvoton-usa.com/products/isd_products/chipcorder/applicationinfo/apin12.pdf

11 PACKAGING

11.1 28-LEAD 8X13.4MM PLASTIC THIN SMALL OUTLINE PACKAGE (TSOP) TYPE 1 - IQC

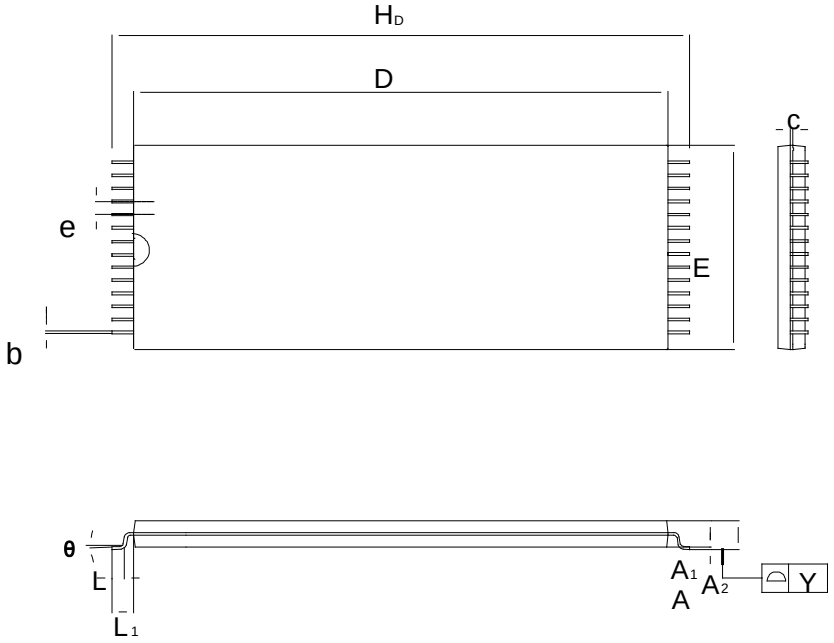

Symbol	Dimension in Inches			Dimension in mm		
	Min.	Nom.	Max.	Min.	Nom.	Max.
A	—	—	0.047	—	—	1.20
A_1	0.002	—	0.006	0.05	—	0.15
A_2	0.035	0.040	0.041	0.95	1.00	1.05
b	0.007	0.008	0.011	0.17	0.20	0.27
c	0.004	0.006	0.008	0.10	0.15	0.21
D	0.461	0.465	0.469	11.70	11.80	11.90
E	0.311	0.315	0.319	7.90	8.00	8.10
H_D	0.520	0.528	0.536	13.20	13.40	13.60
e	—	0.022	—	—	0.55	—
L	0.020	0.024	0.028	0.50	0.60	0.70
L_1	—	0.031	—	—	0.80	—
Y	0.000	—	0.004	0.00	—	0.10
θ	0	3	5	0	3	5

11.2 28-LEAD 300-MIL PLASTIC SMALL OUTLINE INTEGRATED CIRCUIT (SOIC)

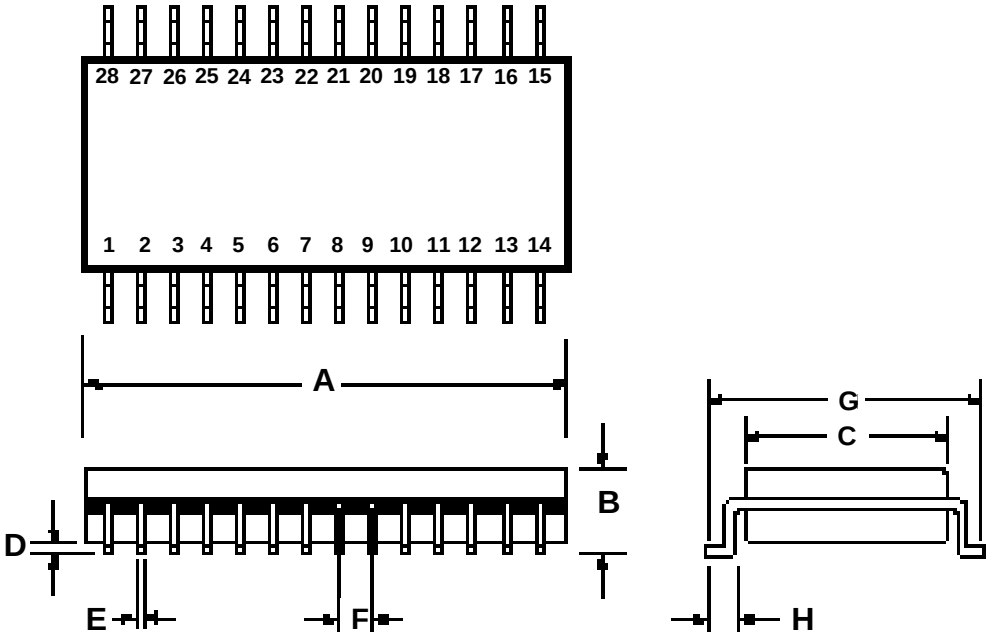

Plastic Small Outline Integrated Circuit (SOIC) Dimensions

	INCHES			MILLIMETERS		
	Min	Nom	Max	Min	Nom	Max
A	0.701	0.706	0.711	17.81	17.93	18.06
B	0.097	0.101	0.104	2.46	2.56	2.64
C	0.292	0.296	0.299	7.42	7.52	7.59
D	0.005	0.009	0.0115	0.127	0.22	0.29
E	0.014	0.016	0.019	0.35	0.41	0.48
F		0.050			1.27	
G	0.400	0.406	0.410	10.16	10.31	10.41
H	0.024	0.032	0.040	0.61	0.81	1.02

Note: *Lead coplanarity to be within 0.004 inches.*

11.3 28-LEAD 600-MIL PLASTIC DUAL INLINE PACKAGE (PDIP)

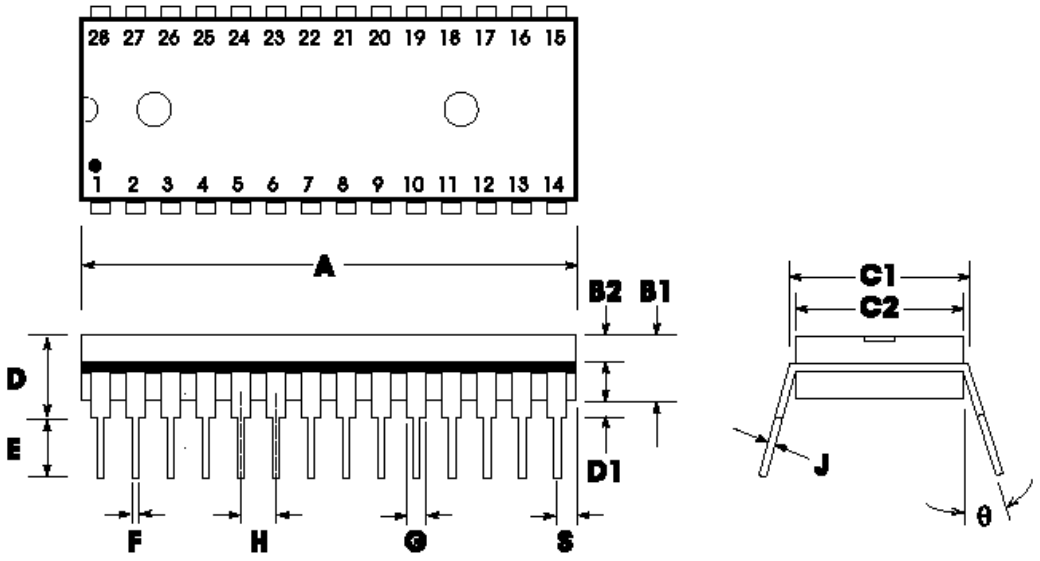

Plastic Dual Inline Package (PDIP) (P) Dimensions

	INCHES			MILLIMETERS		
	Min	Nom	Max	Min	Nom	Max
A	1.445	1.450	1.455	36.70	36.83	36.96
B1		0.150			3.81	
B2	0.065	0.070	0.075	1.65	1.78	1.91
C1	0.600		0.625	15.24		15.88
C2	0.530	0.540	0.550	13.46	13.72	13.97
D			0.19			4.83
D1	0.015			0.38		
E	0.125		0.135	3.18		3.43
F	0.015	0.018	0.022	0.38	0.46	0.56
G	0.055	0.060	0.065	1.40	1.52	1.65
H		0.100			2.54	
J	0.008	0.010	0.012	0.20	0.25	0.30
S	0.070	0.075	0.080	1.78	1.91	2.03
0	0°		15°	0°		15°

12 ORDERING INFORMATION

Product Number Descriptor Key

I17xxxxxxx

Product Name:

I = ISD

Product Series:

17 = 1700

Duration:

30 : 20 – 60 secs

60 : 40 – 120 secs

120 : 80 – 240 secs

240 : 160 – 480 secs

Package Type:

E = Thin Small Outline Package (TSOP)

S = Small Outline Integrated Circuit (SOIC) Package

P = Plastic Dual Inline Package (PDIP)

Tape & Reel:

Blank = None

R = Tape & Reel

Temperature:

I = Industrial (-40°C to +85°C)

Blank = Commercial

- Die (0°C to +50°C)
- Package (0°C to +70°C)

Package Options:

Y = Green

When ordering ISD1700 devices, please refer to the above ordering scheme. Contact the local Nuvoton Sales Representatives for any questions and the availability.

For the latest product information, please contact the Nuvoton Sales/Rep or access Nuvoton's worldwide web site at http://www.Nuvoton-usa.com

13 VERSION HISTORY

VERSION	DATE	DESCRIPTION
1.3-S	Sep 2006	Initial version
1.3-S1	Nov 2006	Revise Pinout Configuration & Pin Description sections
1.3-S2	Jan 2007	Revise Rosc resistor value Revise Selectable Message Duration section Update standby current, sampling frequency & duration parameters
1.31	Oct 31, 2008	Change logo.
2.0	Feb 4, 2010	Remove preliminary sign.

Nuvoton products are not designed, intended, authorized or warranted for use as components in systems or equipment intended for surgical implantation, atomic energy control instruments, airplane or spaceship instruments, transportation instruments, traffic signal instruments, combustion control instruments, or for other applications intended to support or sustain life. Furthermore, Nuvoton products are not intended for applications wherein failure of Nuvoton products could result or lead to a situation wherein personal injury, death or severe property or environmental damage could occur.

Nuvoton customers using or selling these products for use in such applications do so at their own risk and agree to fully indemnify Nuvoton for any damages resulting from such improper use or sales.

The contents of this document are provided only as a guide for the applications of Nuvoton products. Nuvoton makes no representation or warranties with respect to the accuracy or completeness of the contents of this publication and reserves the right to discontinue or make changes to specifications and product descriptions at any time without notice. No license, whether express or implied, to any intellectual property or other right of Nuvoton or others is granted by this publication. Except as set forth in Nuvoton's Standard Terms and Conditions of Sale, Nuvoton assumes no liability whatsoever and disclaims any express or implied warranty of merchantability, fitness for a particular purpose or infringement of any Intellectual property.

The contents of this document are provided "AS IS", and Nuvoton assumes no liability whatsoever and disclaims any express or implied warranty of merchantability, fitness for a particular purpose or infringement of any Intellectual property. In no event, shall Nuvoton be liable for any damages whatsoever (including, without limitation, damages for loss of profits, business interruption, loss of information) arising out of the use of or inability to use the contents of this documents, even if Nuvoton has been advised of the possibility of such damages.

Application examples and alternative uses of any integrated circuit contained in this publication are for illustration only and Nuvoton makes no representation or warranty that such applications shall be suitable for the use specified.

The 100-year retention and 100K record cycle projections are based upon accelerated reliability tests, as published in the Nuvoton Reliability Report, and are neither warranted nor guaranteed by Nuvoton. This product incorporates SuperFlash®.

This datasheet and any future addendum to this datasheet is(are) the complete and controlling ISD® ChipCorder® product specifications. In the event any inconsistencies exist between the information in this and other product documentation, or in the event that other product documentation contains information in addition to the information in this, the information contained herein supersedes and governs such other information in its entirety. This datasheet is subject to change without notice.

Copyright© 2005, Nuvoton Technology Corporation. All rights reserved. ChipCorder® and ISD® are trademarks of Nuvoton Technology Corporation. SuperFlash® is the trademark of Silicon Storage Technology, Inc. All other trademarks are properties of their respective owners.

Headquarters
No. 4, Creation Rd. III
Science-Based Industrial Park,
Hsinchu, Taiwan
TEL: 886-3-5770066
FAX: 886-3-5665577
http://www.Nuvoton.com.tw/

Nuvoton Technology Corporation America
2727 North First Street, San Jose,
CA 95134, U.S.A.
TEL: 1-408-9436666
FAX: 1-408-5441797
http://www.Nuvoton-usa.com/

Nuvoton Technology (Shanghai) Ltd.
27F, 299 Yan An W. Rd. Shanghai,
200336 China
TEL: 86-21-62365999
FAX: 86-21-62356998

Taipei Office
9F, No. 480, Pueiguang Rd.
Neihu District
Taipei, 114 Taiwan
TEL: 886-2-81777168
FAX: 886-2-87153579

Nuvoton Technology Corporation Japan
7F Daini-ueno BLDG. 3-7-18
Shinyokohama Kohokuku,
Yokohama, 222-0033
TEL: 81-45-4781881
FAX: 81-45-4781800

Nuvoton Technology (H.K.) Ltd.
Unit 9-15, 22F, Millennium City,
No. 378 Kwun Tong Rd.,
Kowloon, Hong Kong
TEL: 852-27513100
FAX: 852-27552064

Please note that all data and specifications are subject to change without notice.
All the trademarks of products and companies mentioned in this datasheet belong to their respective owners.