Date	SYM	REVISION RECORD	AUTH	DR.	CK.

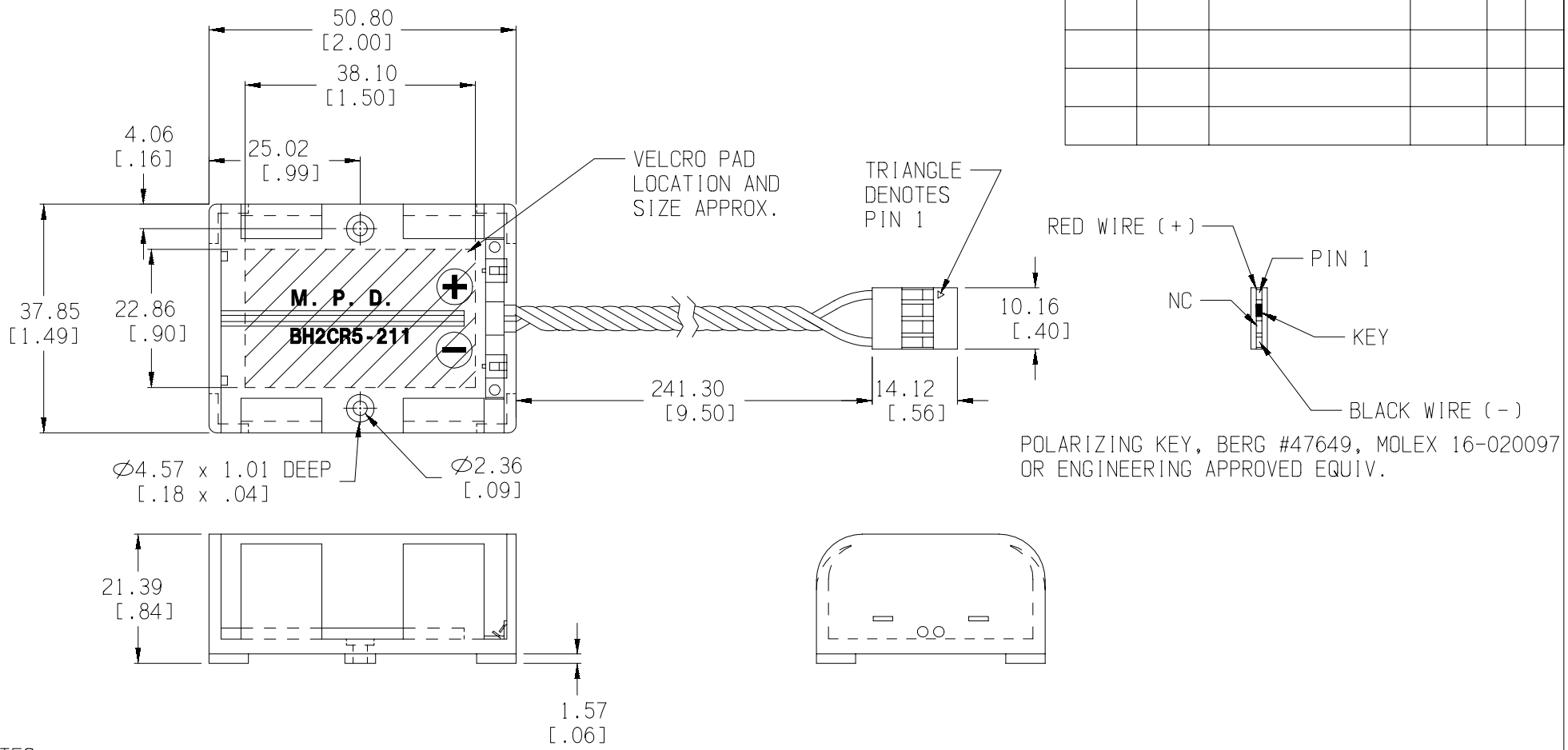

NOTES:

MATERIAL:

HOUSING: HIGH IMPACT ABS, BLACK, UL94V-0
TEMP. RANGE: -40°C TO +110°C

POWER CONTACTS: PHOSPHORUS BRONZE HV190,
NICKLE PLATED

WIRE: 24AWG PVC, UL1007, #E41396, CSA #TR-64
80°C 300V, RED (+), BLACK (-), AWM VW-1, TWISTED

CONNECTOR: BERG, MOLEX OR EQUIV.
BERG #65039-033, MOLEX #50-57-9004 OR EQUIV.

FEMALE 4-PIN CONNECTOR. PIN CENTERS=.100".

CONTACTS: BERG, MOLEX OR EQUIV.
BERG #47565, MOLEX #16-02-0097

SELECT GOLD IN MATING AREA, NICKLE PLTD. OVERALL.

Tolerance (Inches)	Memory Protection Devices, Inc 200 Broad Hollow Road, Farmingdale, New York 11735		
Decimal ±.5 (.020)		Scale	Drawn By B.S. Approved By T.B.
Fractional ± .8 (.030)	Title 2CR5 BATTERY HOLDER WITH POLARIZING KEY		
Angular ± 3°	Date 04/02/01	Drawing Number BH2CR5-211	