THIS DRAWING IS UNPUBLISHED. RELEASED FOR PUBLICATION -,- .
© COPYRIGHT - By - ALL RIGHTS RESERVED.

| LOC | DIST |
|---|---|
| A1 | — |

REVISIONS

| P | LTR | DESCRIPTION | DATE | DWN | APVD |
|---|---|---|---|---|---|
| | Y | PLATING CHANGE TO PdNi + Au FLASH IN NOTE 1 | 26MAY2014 | KJK | JK |

# MODU II SHROUDED POSTS

## MODU II Stiftleiste

### SINGLE ROW 3 TO 50 POS.
Einreihig 3 bis 50 pol.

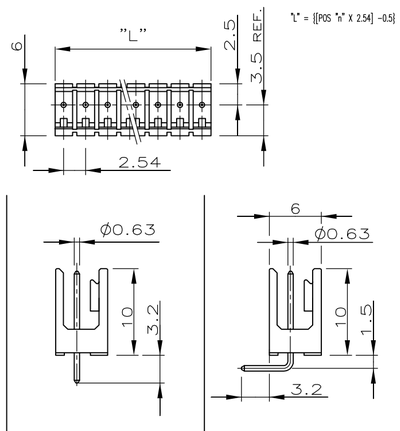


### DOUBLE ROW 2x3 TO 2x50 POS.
Zweireihig 2x3 bis 2x50 pol.

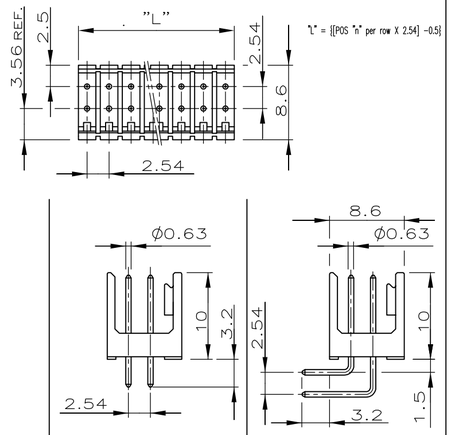


| POS. | PART NUMBERS | PART NUMBERS | POS. | PART NUMBERS | PART NUMBERS |
|---|---|---|---|---|---|
| 3 (2) TO 50 | 1 826 467-3 BIS ~~5-826 467-0~~ 3 | 1 826 468-3 BIS 5-826 468-0 | 2x3 TO 2x50 | 1 826 469-3 BIS 5-826 469-0 | 1 826 470-2 BIS 5-826 470-0 |
| | 2 ~~827 295-2 BIS~~ ~~5-827 295-0~~ 3 3 | 2 827 296-3 BIS ~~5-827 296-0~~ 3 | | 2 827 297-3 BIS ~~5-827 297-0~~ 3 | 2 ~~827 298-3 BIS~~ 5-827 298-0 3 3 |

## RETENTION PLUG
Rastgabel

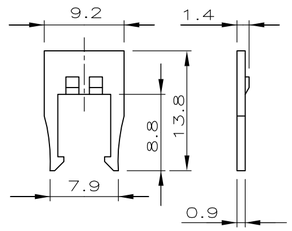


## RETENTION PLUG WITH STRAIN RELIEF
Rastgabel mit Zugentlastung

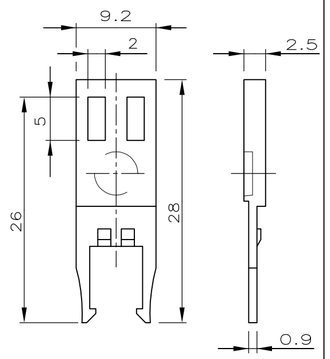


## KEYING PLUG
Kodierstift

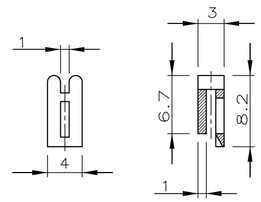


## KEYING BLOCK
Kodierblock

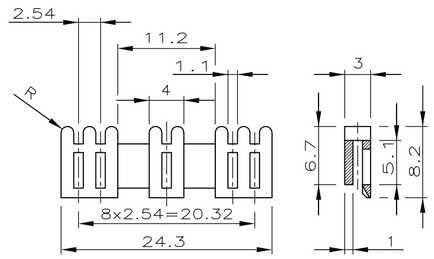


| PART NUMBERS | COLOUR | PART NUMBERS | COLOUR | PART NUMBERS | COLOUR | PART NUMBERS | COLOUR |
|---|---|---|---|---|---|---|---|
| 926 477-1 | BLACK | 926 478-1 | BLACK | 926 498-1 | BLACK | ~~927 607-1~~ 3 | BLACK |
| 926 477-2 | GREEN | ~~926 478-2~~ 3 | GREEN | 926 498-2 | GREEN | ~~927 607-2~~ 3 | GREEN |
| 926 477-3 | RED | 926 478-3 | RED | 926 498-3 | RED | ~~927 607-3~~ 3 | RED |

## MODU IV RECEPTACLE HOUSING
MODU IV Buchsengehäuse

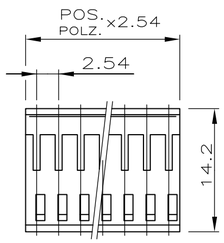


SINGLE ROW
2 TO 36 POS.
Einreihig
2 bis 36 polig.

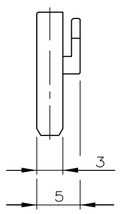


DOUBLE ROW
2x2 TO 2x36 POS.
Zweireihig
2x2 bis 2x36 polig

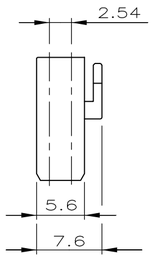


## FFC HOUSING
FFC Gehäuse

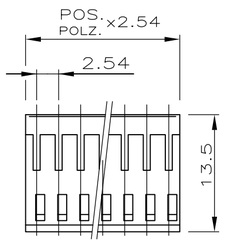


DOUBLE ROW
2x3 TO 2x13 POS.
Zweireihig
2x3 bis 2x13 polig

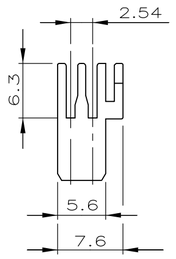


| POS. | PART NUMBERS | POS. | PART NUMBERS | POS. | PART NUMBERS |
|---|---|---|---|---|---|
| 2 TO 36 | 926 475-2 | 2x2 TO 2x36 | 926 476-2 | 2x3 TO 2x13 | ~~927 009-3~~ 4 |
| | 3-926 475-6 | | 3-926 476-6 | | 1-927 009-3 3 |

## ASSEMBLED COMPONENTS (FOR EXAMPLE)
Anwendungsbeispiel

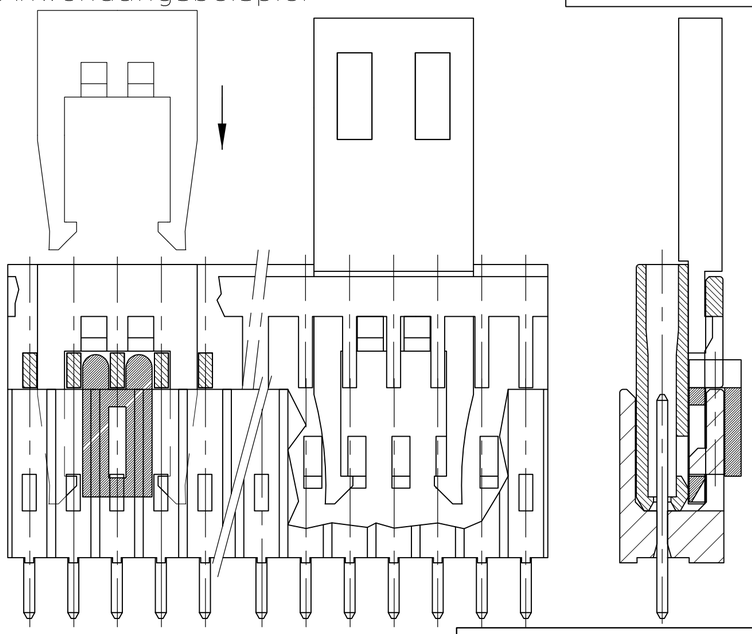

1 CONTACT PIN/Kontaktstift: CuZn
PLATING MATING AREA:
MIN. 0.7µm PdNi + 0.1µm GOLD FLASH OVER 1.27µm Ni
SOLDER SIDE: MIN 3.0µm Sn OVER 1.27µm Ni

2 CONTACT PIN/Kontaktstift: CuSn
PRE TIN PLATED MIN. 2.0µm Sn OVER 1.27µm Ni (PIN TIPS BLANK)
Vorverzinnt min. 2.0µm Sn über 1.27µm Ni (Stiftspitzen blank)

MATERIAL:

| | | |
|---|---|---|
| PIN HEADER Stiftgehäuse | PCT-GV | BLACK/schwarz |
| RECEPTACLE HOUSING Buchsengehäuse | PBT-GV | BLACK/schwarz |
| RETENTION PLUGS Rastgabeln | PC-GV | |
| KEYING PLUG AND BLOCK Kodierstift, -block | PA 6.6 GV | |
| FFC HOUSING FFC Gehäuse | PBT-GV | BLACK/schwarz |

3 OBSOLETE PARTS

4 OBSOLETE PARTS:OBSOLETE CIS STREAMLINING PER D.RENAUD/D.SINISI

826467

THIS DRAWING IS A CONTROLLED DOCUMENT.

DIMENSIONS: mm

TOLERANCES UNLESS OTHERWISE SPECIFIED: ±0.2mm
0 PLC ± -
1 PLC ± -
2 PLC ± -
3 PLC ± -
4 PLC ± -
ANGLES ± -

MATERIAL -
FINISH -

DWN A.HO 08.03.85
CHK M.SCHAARSCHMIDT 02.05.85
APVD -
PRODUCT SPEC -
APPLICATION SPEC -
WEIGHT -

TE Connectivity

NAME AMPMODU II / AMPMODU IV

| SIZE | CAGE CODE | DRAWING NO | RESTRICTED TO |
|---|---|---|---|
| A2 | 00779 | C-826467 | - |

CUSTOMER DRAWING | SCALE 2:1 | SHEET 1 OF 2 | REV Y

THIS DRAWING IS UNPUBLISHED. RELEASED FOR PUBLICATION -,- .
© COPYRIGHT - By - ALL RIGHTS RESERVED.

| LOC | DIST |
|---|---|
| A1 | — |

REVISIONS

| P | LTR | DESCRIPTION | DATE | DWN | APVD |
|---|---|---|---|---|---|
| | - | SEE SHEET 1 | - | — | — |

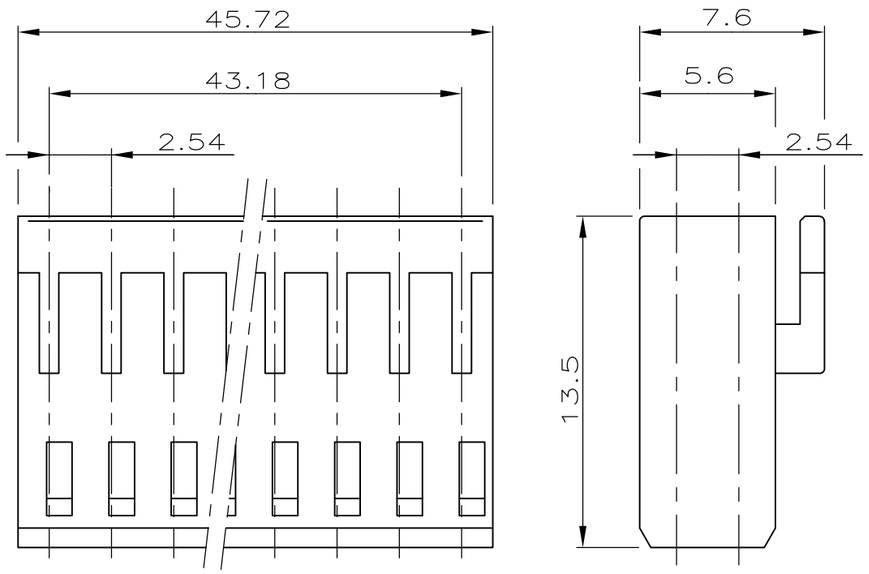


PN 6-926476-8

2x18 POS. AMPMODU IV RECEPTACLE HOUSING

2x18 POL. AMPMODU IV BUCHSENGEHÄUSE

PACKAGING
Verpackung

PART NUMBER 5-826467-3 INCLUDING 75 PCS. OF PN 826467-3
PACKED IN PLASTIC BOX (78mm x 78mm x 45mm)
FOR TE-HARRISBURG ONLY

Bestell- Nummer 5-826467-3 enthällt 75 Stk. PN 826467-3
verpackt in Kunststoffschachtel (78mm x 78mm x 45mm)
nur für TE-Harrisburg

THIS DRAWING IS A CONTROLLED DOCUMENT.

DIMENSIONS: mm

TOLERANCES UNLESS OTHERWISE SPECIFIED: ±0.2mm
0 PLC ± -
1 PLC ± -
2 PLC ± -
3 PLC ± -
4 PLC ± -
ANGLES ± -

MATERIAL -

FINISH -

DWN M.SCHAARSCHMIDT 27.09.85
CHK W.MORITZ 30.09.85
APVD —
PRODUCT SPEC —
APPLICATION SPEC —
WEIGHT —

TE Connectivity

NAME AMPMODU II/AMPMODU IV

| SIZE | CAGE CODE | DRAWING NO | RESTRICTED TO |
|---|---|---|---|
| A3 | 00779 | C-826467 | — |

CUSTOMER DRAWING

| SCALE | SHEET | REV |
|---|---|---|
| 4:1 | 2 OF 2 | Y |