THIS DRAWING IS UNPUBLISHED. RELEASED FOR PUBLICATION -,- .
© COPYRIGHT - By - ALL RIGHTS RESERVED.

LOC	DIST
AF	50

REVISIONS

P	LTR	DESCRIPTION	DATE	DWN	APVD
	F	REVISED PER ECR-12-013518	23NOV2012	KH	PD

1 DIM'S IN BRACKETS ARE IN INCHES.

2 CONTINUOUS STRIP ON REELS.

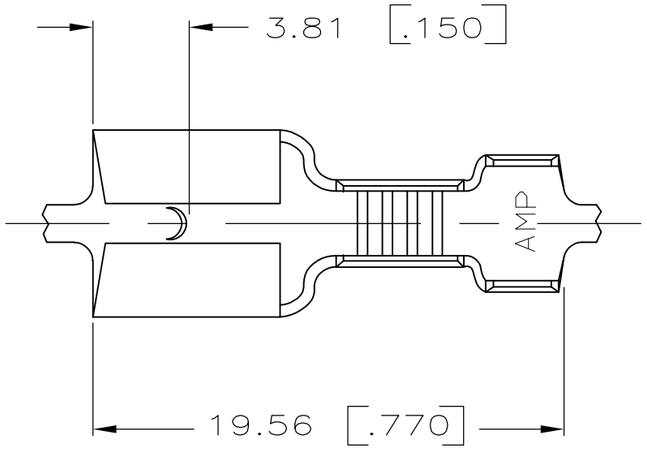

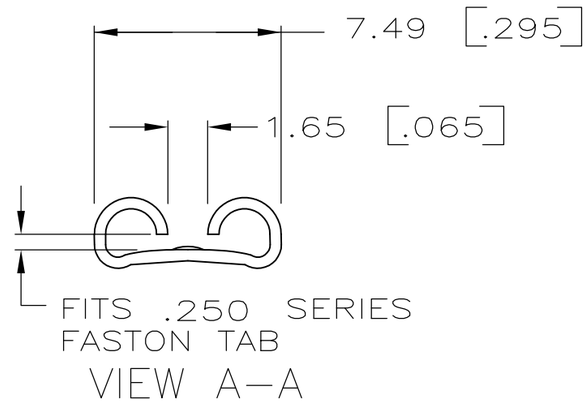

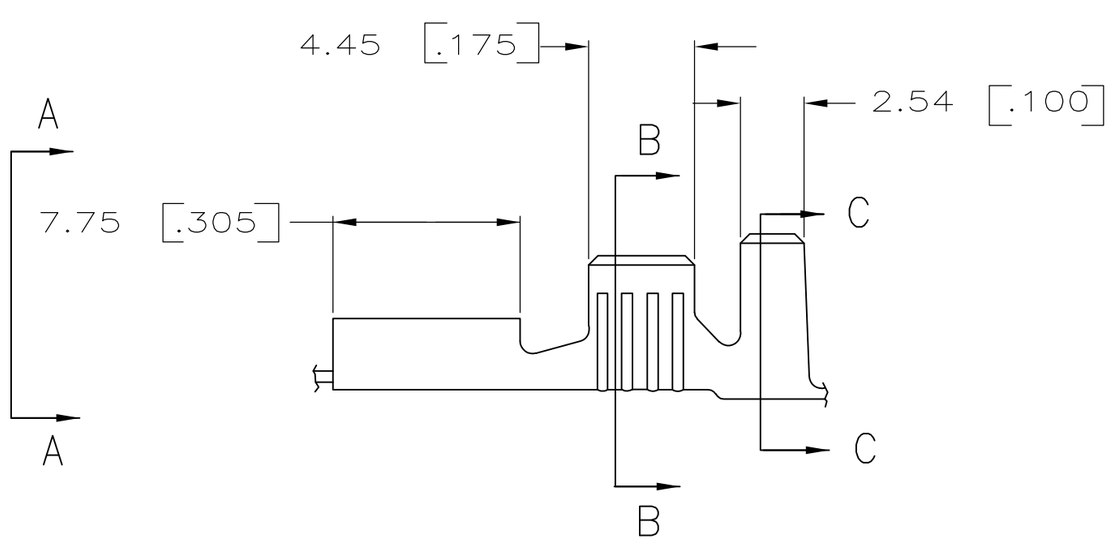

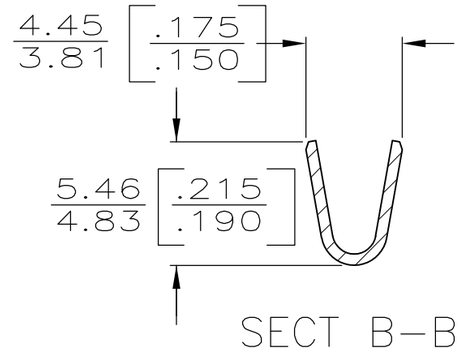

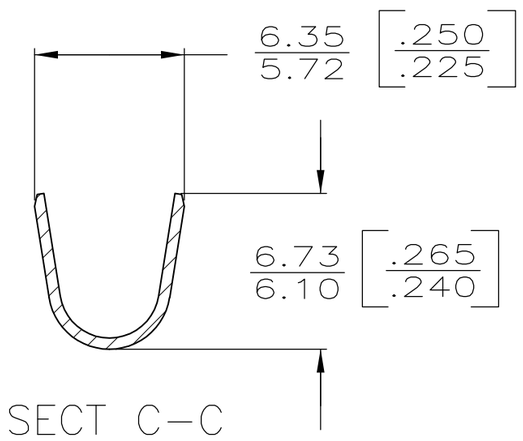

INSUL RANGE	WIRE SIZE	TAB THK	PART NO
3.81–5.08 [.150–.200]	2.0–5.0mm² [14–10]	0.81±0.025 [.032] ±.001	63412–1

TYPE	WIDTH	STRIP LENGTH ±0.38 [±.015]	TYPE	WIDTH	HEIGHT	WIRE
0	5.33 [.210]	5.59 [.220]	F	3.30 [.130]	2.90 [.114]	5.0mm² [10]
					2.39 [.094]	3.0mm² [12]
					2.08 [.082]	2.0mm² [14]
					±.051 [±.002]	
INSUL BARREL CRIMP		WIRE BARREL CRIMP				

THIS DRAWING IS A CONTROLLED DOCUMENT.

DIMENSIONS: mm [INCHES]

TOLERANCES UNLESS OTHERWISE SPECIFIED:

0 PLC	± –
1 PLC	± –
2 PLC	± 0.25[.010]
3 PLC	± –
4 PLC	± –
ANGLES	± –

MATERIAL: BRASS

FINISH: TIN

DWN	JR RUTH	2/7/86
CHK	G YETTER	2/7/86
APVD	C MEYERS	2/7/86
PRODUCT SPEC	—	
APPLICATION SPEC	—	
WEIGHT	—	

TE Connectivity

NAME: .250 SERIES FASTON RECEPTACLE

SIZE	CAGE CODE	DRAWING NO	RESTRICTED TO
A3	00779	C-63412	—

CUSTOMER DRAWING

SCALE	SHEET	REV
4:1	1 OF 1	F