OPTION G

NOTES:
1. MATERIAL:
   HOUSING: POLYESTER(PBT), GLASS FILLED, UL94 V-0,
   COLOR: BLACK
   TERMINAL: PHOSPHOR BRONZE
2. FINISH:
   15 GOLD: 0.38 MICROMETERS/15 MICROINCHES MINIMUM GOLD IN
   1.91 MICROMETERS/75 MICROINCHES MINIMUM TIN
   OVER NICKEL UNDERPLATE OVERALL
3. TO BE USED WITH 22 AWG STRANDED WIRE WITH (1.35)/.053 DIAMETER MAXIMUM INSULATION
4. SEE TABLE FOR AVAILABLE CIRCUIT SIZES
5. STANDARD PACKAGING PER PK-70873-0001. OPTIONAL PACKAGING MAY BE AVAILABLE, REQUEST DRAWING PK-70400
6. PARTS STACKABLE END TO END ON (2.54)/.100 CENTERS
7. PRODUCT SPECIFICATION: PS-70400
8. SEE DRAWING SDA-70400-**** (SHEET 3) FOR OPTIONAL HOUSING DETAILS
9. 4 CIRCUIT SHOWN. 3-25 CIRCUITS HAVE 2 RIBS
10. TO MATE WITH MOLEX PART NUMBERS: A-70373-****, A-70375-****, A-70389-****, A-70391-****, A-70107-****, A-70018-****, A-70543-****, A-70553-****, A-70541-****, A-70551-****, A-70545-****, A-70555-****
11. 2 CIRCUIT ASSEMBLIES SUPPLIED AS GROUPED PAIRS

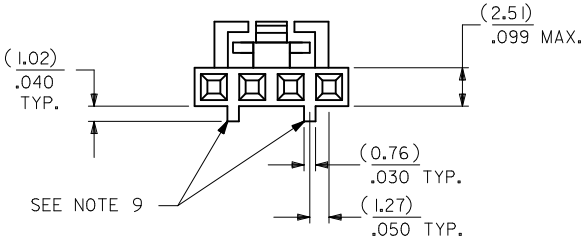

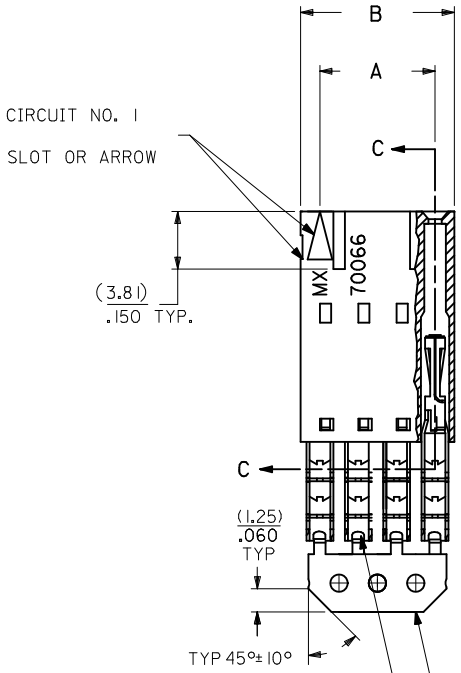

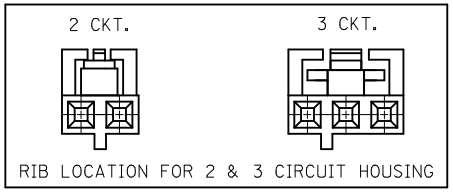

SECTION C-C

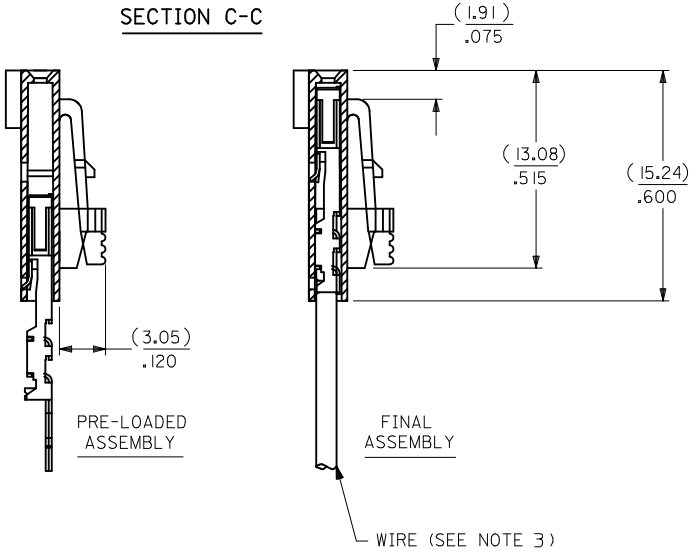

CKT. SIZE	A	B	EDP. NO.
2	(2.54) .100	(5.05) .199	14-56-7027
3	(5.08) .200	(7.59) .299	14-56-7037
4	(7.62) .300	(10.13) .399	14-56-7047
5	(10.16) .400	(12.67) .499	14-56-7057
6	(12.70) .500	(15.21) .599	14-56-7067
7	(15.24) .600	(17.75) .699	14-56-7077
8	(17.78) .700	(20.29) .799	14-56-7087
9	(20.32) .800	(22.83) .899	14-56-7097
10	(22.86) .900	(25.37) .999	14-56-7107
11	(25.54) 1.000	(27.91) 1.099	14-56-7117
12	(27.94) 1.100	(30.45) 1.199	14-56-7127
13	(30.48) 1.200	(32.99) 1.299	14-56-7137
14	(33.02) 1.300	(35.53) 1.399	14-56-7147
15	(35.56) 1.400	(38.07) 1.499	14-56-7157
16	(38.01) 1.500	(40.61) 1.599	14-56-7167
17	(40.64) 1.600	(43.15) 1.699	14-56-7177
18	(43.18) 1.700	(45.69) 1.799	14-56-7187
19	(45.72) 1.800	(48.23) 1.899	14-56-7197
20	(48.26) 1.900	(50.77) 1.999	14-56-7207
21	(50.80) 2.000	(53.31) 2.099	14-56-7217
22	(53.34) 2.100	(55.85) 2.199	14-56-7227
23	(55.88) 2.200	(58.39) 2.299	14-56-7237
24	(58.42) 2.300	(60.93) 2.399	14-56-7247
25	(60.96) 2.400	(63.47) 2.499	14-56-7257

I.D. SLOT CODE TO WIRE GAUGE CHART	
I.D. SLOT CODE	WIRE GAUGE
D	22 AWG.

PLATING CODE (STRIPE ON CARRIER STRIP)	
PLATING	COLOR
15 GOLD	YELLOW

REMOVE ENG NO.
EC NO: UCP2011-1110 2010/10/19
DRWN:MSIBARRA 2010/10/19
CH'KD:DMORGAN 2010/11/24
APPR:SMILLER
DESCRIPTION
REV G

QUALITY SYMBOLS
E =0
E =0
E =0

GENERAL TOLERANCES (UNLESS SPECIFIED)

	mm	INCH
4 PLACES	± ---	± ---
3 PLACES	± ---	± .010
2 PLACES	± 0.25	± .014
1 PLACE	± 0.35	± ---
ANGULAR ±1/2°		

DRAFT WHERE APPLICABLE MUST REMAIN WITHIN DIMENSIONS

DIMENSION STYLE: MM/IN
SCALE
DESIGN UNITS: INCH
THIRD ANGLE PROJECTION

DRAWN BY	MSIBARRA	DATE 2010/10/20
CHECKED BY	WAZ	DATE 1987/10/26
APPROVED BY	SMILLER	DATE 2010/11/24

TITLE: ASSEMBLY, SL CONNECTOR SINGLE ROW 2.54/.100

MOLEX INCORPORATED

MATERIAL NO.: SEE TABLE
DOCUMENT NO.: SDA-70400-2976-2999
SHEET NO.: 1 OF 1
SIZE: C

THIS DRAWING CONTAINS INFORMATION THAT IS PROPRIETARY TO MOLEX INCORPORATED AND SHOULD NOT BE USED WITHOUT WRITTEN PERMISSION