THIS DRAWING IS UNPUBLISHED. RELEASED FOR PUBLICATION -,- .
© COPYRIGHT - BY TYCO ELECTRONICS CORPORATION. ALL RIGHTS RESERVED.

LOC	DIST
AF	50

REVISIONS

P	LTR	DESCRIPTION	DATE	DWN	APVD
	E1	ECR-07-010352(REDRAWN IN AUTOCAD)	23FEB07	HMR	GP

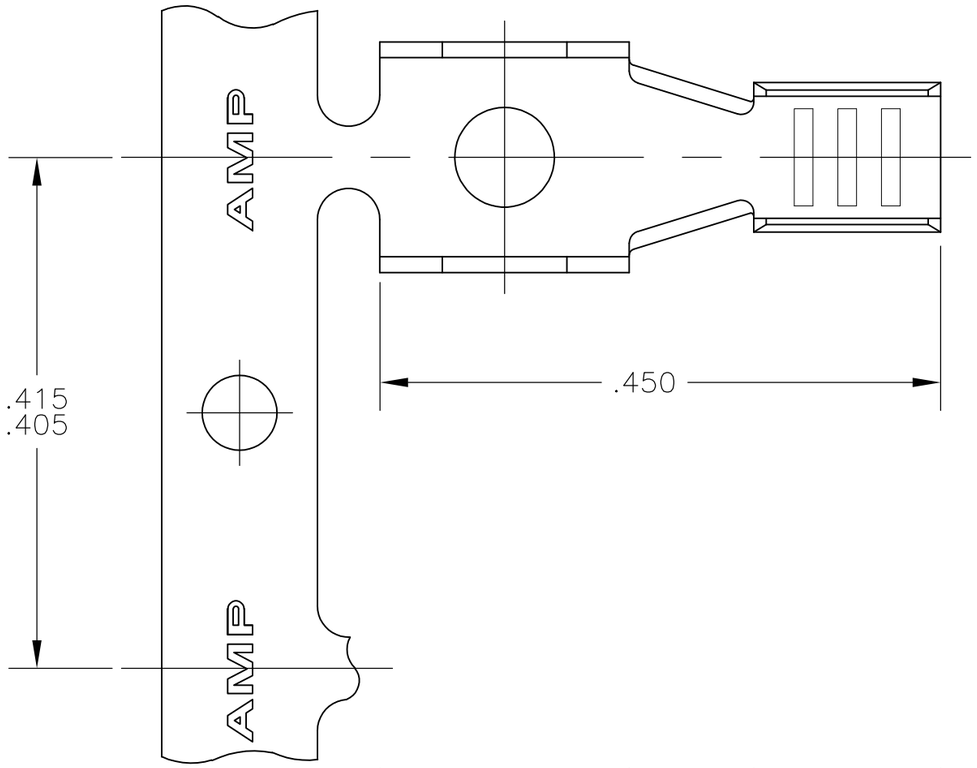

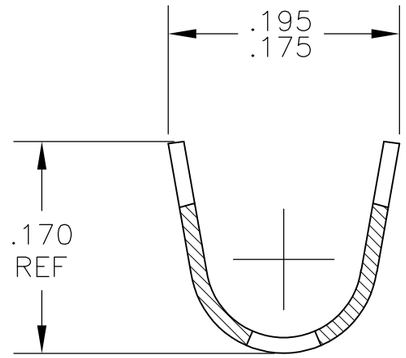

SECTION A–A

1 CONTINUOUS STRIP ON REELS.

2 WIRE RANGE: 1600 TO 4100 CMA

3 INSULATION RANGE: .105 – .145 DIA.

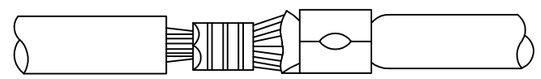

THROUGH CONNECTION

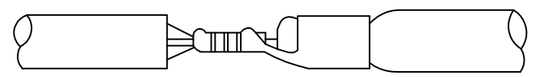

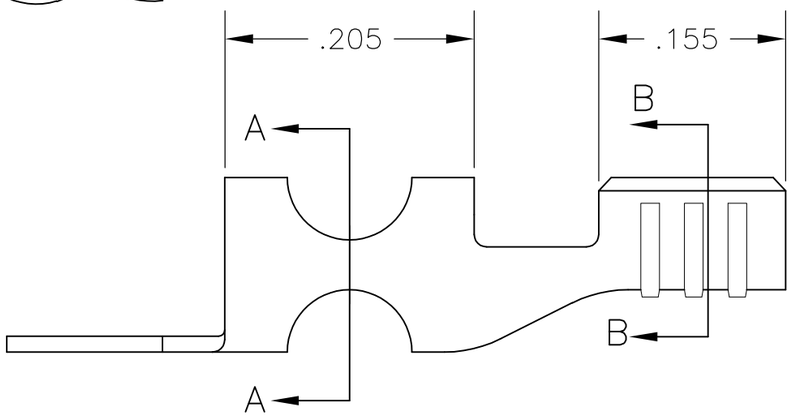

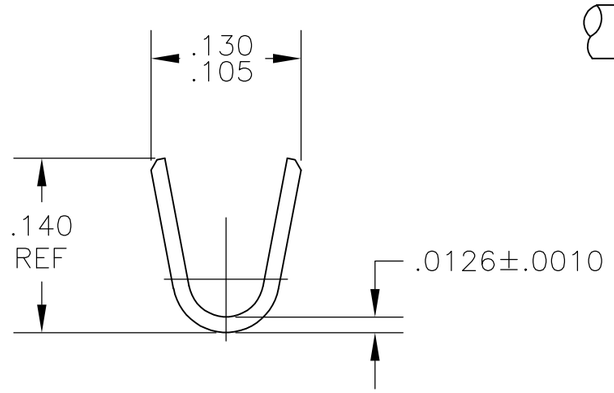

SECTION B–B

OBSOLETE	~~.000080 MIN TIN~~	~~60806-2~~
	NONE	60806-1
	FINISH	PART NO

THIS DRAWING IS A CONTROLLED DOCUMENT.

DIMENSIONS: INCHES

TOLERANCES UNLESS OTHERWISE SPECIFIED:

0 PLC	± –
1 PLC	± –
2 PLC	± –
3 PLC	± .010
4 PLC	± –
ANGLES	± –

MATERIAL: 081 BRASS

FINISH: SEE TABLE

DWN	RAGHAVENDRA	23FEB07
CHK	G.D.PORTA	23FEB07
APVD	G.D.PORTA	23FEB07
PRODUCT SPEC	—	
APPLICATION SPEC	—	
WEIGHT	—	

tyco Electronics

Tyco Electronics Corporation
Harrisburg, Pa 17105-3608

NAME: SPLICE

SIZE	CAGE CODE	DRAWING NO	RESTRICTED TO
A3	00779	C-60806	—

CUSTOMER DRAWING

SCALE	SHEET	REV
8:1	1 OF 1	E1