0.54" Dual Digit Alpha Numeric Display

FEATURES

- 0.54" digit height
- Right hand decimal point
- Additional colors/materials available

OPTO-ELECTRICAL CHARACTERISTICS (Ta = 25°C)

PART NO.	PEAK WAVE LENGTH (nm)	EMITTED COLOR	FACE COLORS		MAXIMUM RATINGS			OPTO-ELECTRICAL CHARACTERISTICS							PIN-OUT
			SURFACE COLOR	EPOXY COLOR	IF (mA)	VR (V)	PD (mW)	VF(V)			IR(µA)		IV(µcd)		
								typ.	max.	@mA	max.	@VR	typ. per seg.	@mA	
MTAN2254-11A	567	Green	Grey	White	30	5	85	2.1	3.0	20	100	5	2900	10	1
MTAN4254-11A	635	Orange	Grey	White	30	5	85	2.1	3.0	20	100	5	3300	10	1
MTAN4254R-11A	635	Hi-Eff Red	Red	Red	30	5	85	2.1	3.0	20	100	5	3300	10	1
MTAN7254M-11A	660	Ultra Red	Grey	White	30	4	70	1.7	2.2	20	100	4	17300	20	1
MTAN2254-11C	567	Green	Grey	White	30	5	85	2.1	3.0	20	100	5	2900	10	2
MTAN4254-11C	635	Orange	Grey	White	30	5	85	2.1	3.0	20	100	5	3300	10	2
MTAN4254R-11C	635	Hi-Eff Red	Red	Red	30	5	85	2.1	3.0	20	100	5	3300	10	2
MTAN7254M-11C	660	Ultra Red	Grey	White	30	4	70	1.7	2.2	20	100	4	17300	20	2

Operating Temperature: -25~+85, Storage Temperature: -25~+100. Other face/epoxy colors are available.

PACKAGE DIMENSIONS AND PIN FUNCTIONS

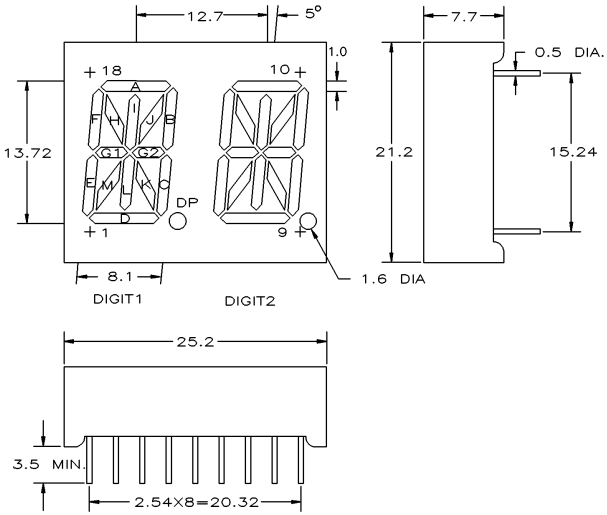

PINOUT 1
COMMON ANODE

PIN NO.	FUNCTION
1.	CATHODE E
2.	CATHODE M
3.	NO CONNECTION
4.	CATHODE L
5.	CATHODE K
6.	CATHODE G2
7.	CATHODE D
8.	CATHODE DP
9.	CATHODE C
10.	CATHODE B
11.	D2 COMMON ANODE
12.	CATHODE A
13.	CATHODE G1
14.	CATHODE J
15.	CATHODE I
16.	D1 COMMON ANODE
17.	CATHODE H
18.	CATHODE F

PINOUT 2
COMMON CATHODE

PIN NO.	FUNCTION
1.	ANODE E
2.	ANODE M
3.	NO CONNECTION
4.	ANODE L
5.	ANODE K
6.	ANODE G2
7.	ANODE D
8.	ANODE DP
9.	ANODE C
10.	ANODE B
11.	D2 COMMON CATHODE
12.	ANODE A
13.	ANODE G1
14.	ANODE J
15.	ANODE I
16.	D1 COMMON CATHODE
17.	ANODE H
18.	ANODE F

1. ALL DIMENSIONS ARE IN mm, TOLERANCE IS ±0.25mm UNLESS OTHERWISE SPECIFIED.
2. THE SLOPE ANGLE OF ANY PIN MAY BE ±5.0° MAX.

marktech optoelectronics
120 Broadway • Menands, New York 12204
Toll Free: **(800) 98-4LEDS** • Fax: (518) 432-7454