wakefield-vette

Standard P/N	Height Above PC Board in. (mm)	Overall Fin Width in. (mm)	Thermal Performance Natural Convection	Finish	Weight lbs. (grams)
292-AB	0.750 (19.1)	0. 600 (15.3)	0.225° C/W @ 0.250 W	Black Anodized	0.00049 (0.22)

MECHANICAL DIMENSIONS 292 SERIES

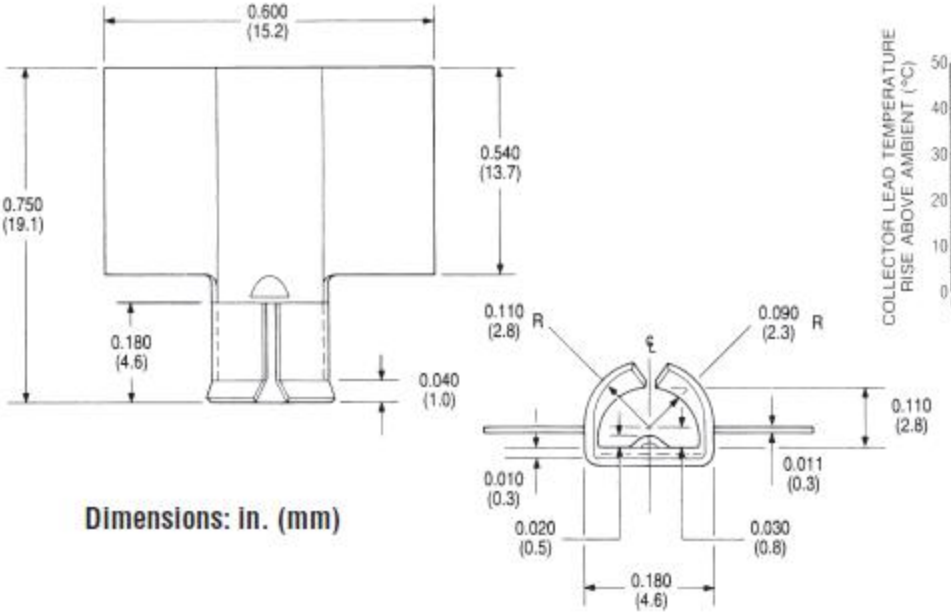

Dimensions: in. (mm)
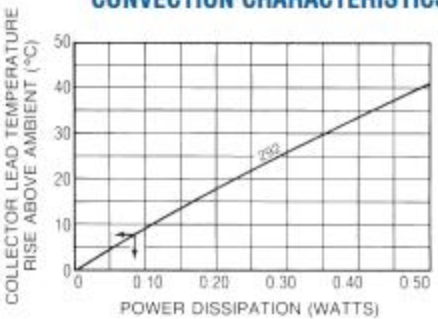
NATURAL AND FORCED CONVECTION CHARACTERISTICS