THIS DRAWING IS UNPUBLISHED. RELEASED FOR PUBLICATION -,- .
© COPYRIGHT - BY TYCO ELECTRONICS CORPORATION. ALL INTERNATIONAL RIGHTS RESERVED.

LOC	DIST
AF	50

REVISIONS

P	LTR	DESCRIPTION	DATE	DWN	APVD
	L	REVISED PER ECR-10-006099	10JUL10	HMR	PD

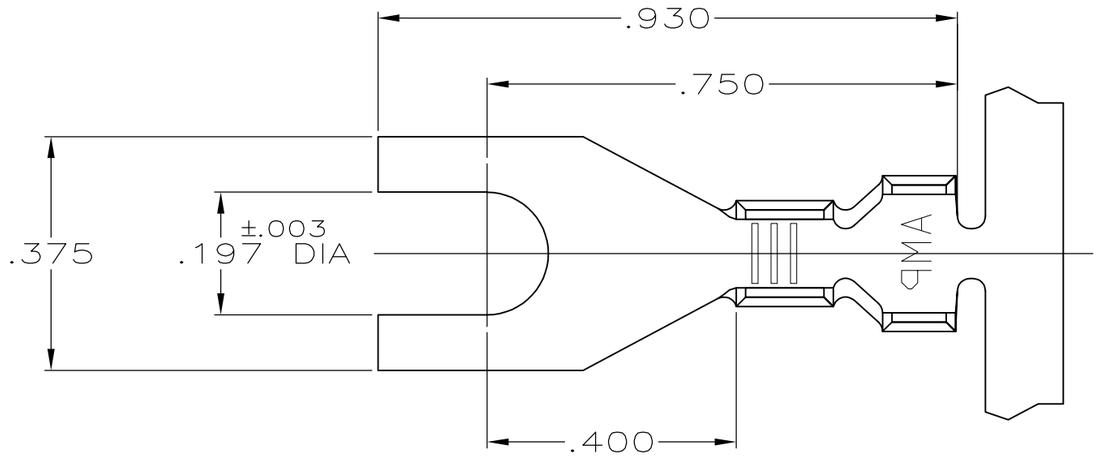

1. CONTINUOUS STRIP ON REEL.
2. P/N 61857-2 IS REVERSE REELED.

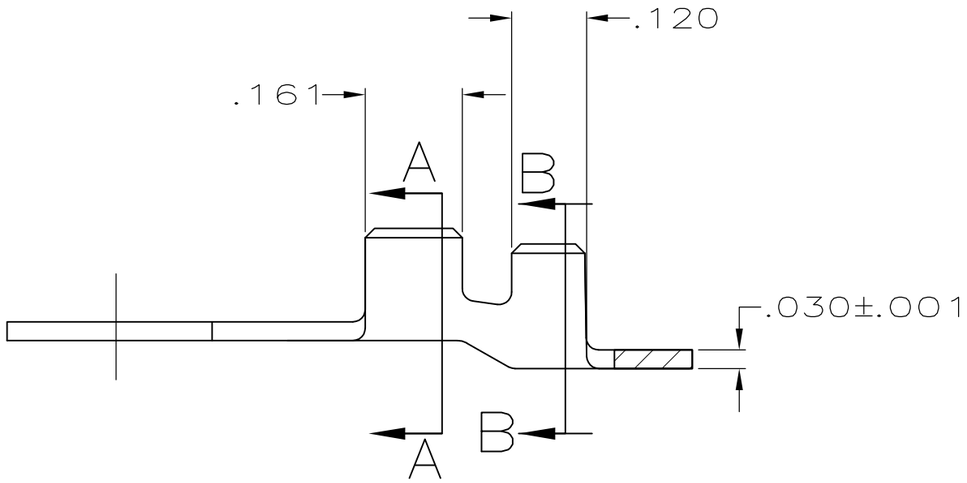

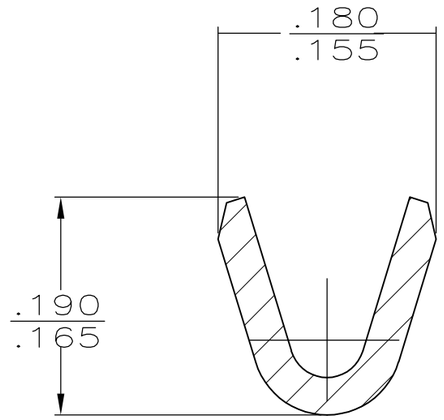

SECTION A-A
SCALE 8:1

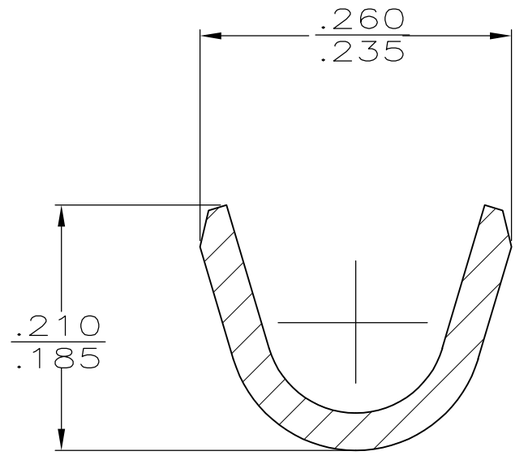

SECTION B-B
SCALE 8:1

OBSOLETE	.090-.150 DIA	18-14 AWG	61857-2
			~~61857-1~~
	INSULATION RANGE	WIRE RANGE	PART NO

THIS DRAWING IS A CONTROLLED DOCUMENT.

DIMENSIONS: INCHES

TOLERANCES UNLESS OTHERWISE SPECIFIED:

0 PLC	± -
1 PLC	± -
2 PLC	± -
3 PLC	± .015
4 PLC	± -
ANGLES	± -

MATERIAL: #2 HARD BRASS

FINISH: TIN

DWN	P FORTNEY	4/15/91
CHK	JR RUTH	4/15/91
APVD	G YETTER	4/15/91
PRODUCT SPEC	—	
APPLICATION SPEC	—	
WEIGHT	—	

Tyco Electronics

Tyco Electronics Corporation
Harrisburg, PA 17105-3608

NAME: SPADE

SIZE	CAGE CODE	DRAWING NO	RESTRICTED TO
A3	00779	C-61857	—

CUSTOMER DRAWING

SCALE	SHEET	REV
4:1	1 OF 1	L