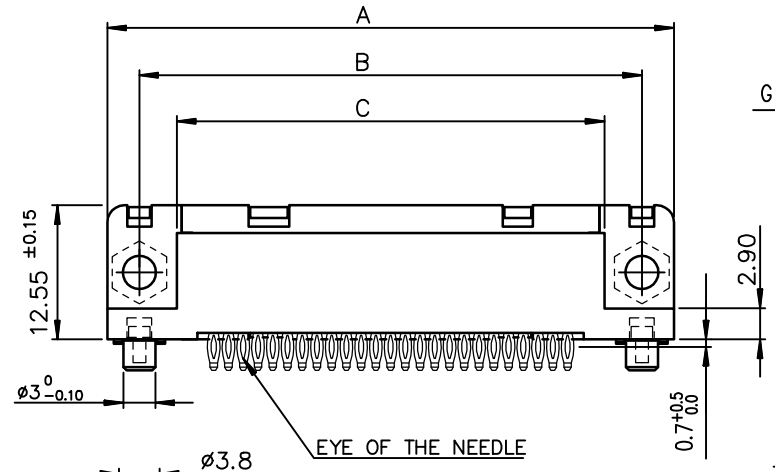

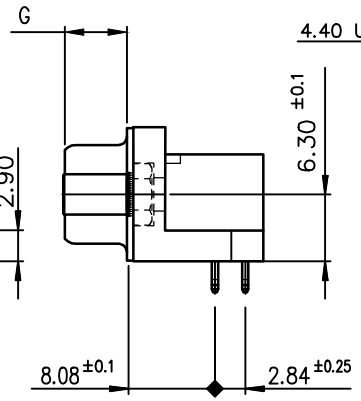

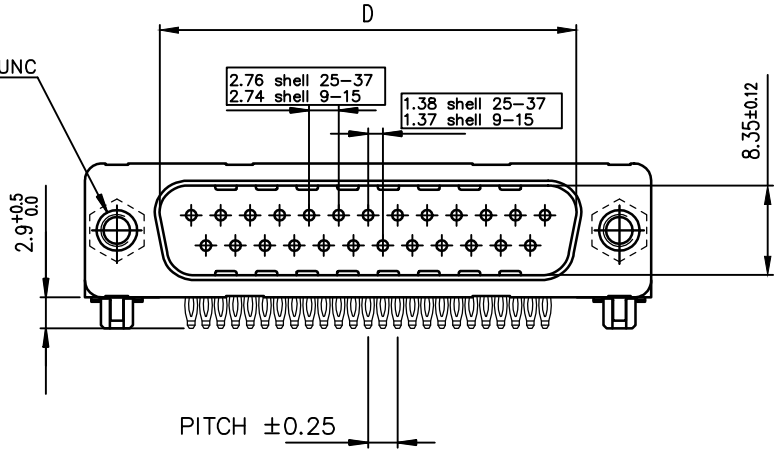

Detail of grounding strip

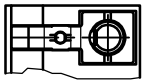

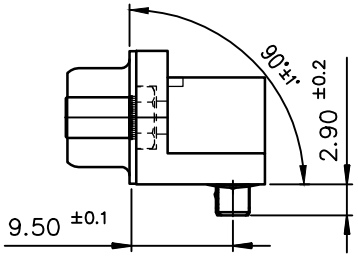

PC card drilling dimensions(after plating)
(thickness 1.60 or 2.40±0.20mm)

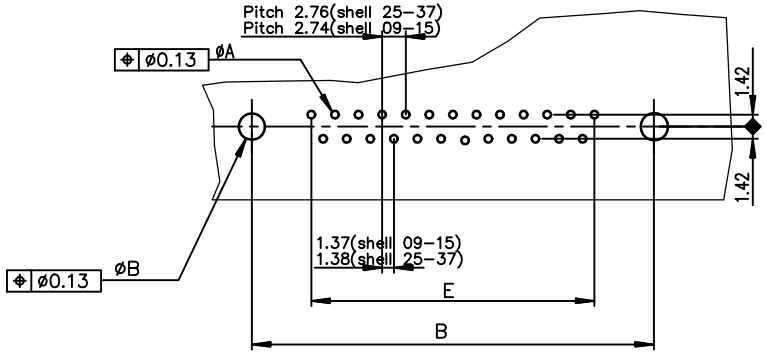

TIN LEAD PART NUMBER

SHELL	A±0.38	B±0.12	C±0.10	D +0.25 0	E±0.07	G	PART NUMBER	PART NUMBER
09	30.81	24.99	18.00	16.79	10.96	5.90 +0.15 0	D09P80C4GV00	D09P80C6GV00
15	39.14	33.32	26.32	25.12	19.18	5.90 +0.15 0	D15P80C4GV00	D15P80C6GV00
25	53.03	47.04	40.04	38.84	33.12	5.70 +0.25 0	D25P80C4GV00	D25P80C6GV00
37	69.32	63.50	56.50	55.30	49.68	5.70 +0.25 0	D37P80C4GV00	D37P80C6GV00
							Gold flash	0,76 » gold

LEAD FREE PART NUMBER

SHELL	A±0.38	B±0.12	C±0.10	D +0.25 0	E±0.07	G	PART NUMBER	PART NUMBER
09	30.81	24.99	18.00	16.79	10.96	5.90 +0.15 0	D09P80C4GV00LF	D09P80C6GV00LF
15	39.14	33.32	26.32	25.12	19.18	5.90 +0.15 0	D15P80C4GV00LF	D15P80C6GV00LF
25	53.03	47.04	40.04	38.84	33.12	5.70 +0.25 0	D25P80C4GV00LF	D25P80C6GV00LF
37	69.32	63.50	56.50	55.30	49.68	5.70 +0.25 0	D37P80C4GV00LF	D37P80C6GV00LF
							Gold flash	0,76 » gold

GENERAL CHARACTERISTICS AND ROHS INFORMATIONS:

SEE DRAWING C01-8646-0001

mat'l. code –				surface ISO 1302	tolerance ISO 406 ISO 1101	projection	product family D-SUB
ltr	ecn no	dr	date	tolerances unless otherwise specified			title
H	ELX-I-17859	MP	2014/06/06	angles	linear .0±.0.1	MM	MALE CONNECTOR DELTA-D US RIGHT ANGLED PRESS FIT
					.00±0.1		
				0°±2°	.000±0.1	scale 2:1	
				dr	PESSON 1995/04/24		dwg no C01-8646-0347 sheet 1 of 1 size A3
				engr	MITHUN PAUL 2014/06/06		
				chr	ALIAS BABU 2014/06/06		
				appd	BIJU K PAUL 2014/06/06		type Product Customer Drawing
sheet index	revision	H					
	sheet	1					

FCIconnect.com
Copyright FCI