| REV. | DATE | ECR NO. | DESCRIPTION |
|---|---|---|---|
| A | 04/31/03 | – | UPDATE DRAWING FORMST |
| B | 11/13/06 | – | MODIFY BARREL OD. TO 2.70mm |
| C | 04/27/08 | 100011 | REVISE FERRULE I.D. TO 3.20mm AND O.D. TO 3.9mm |

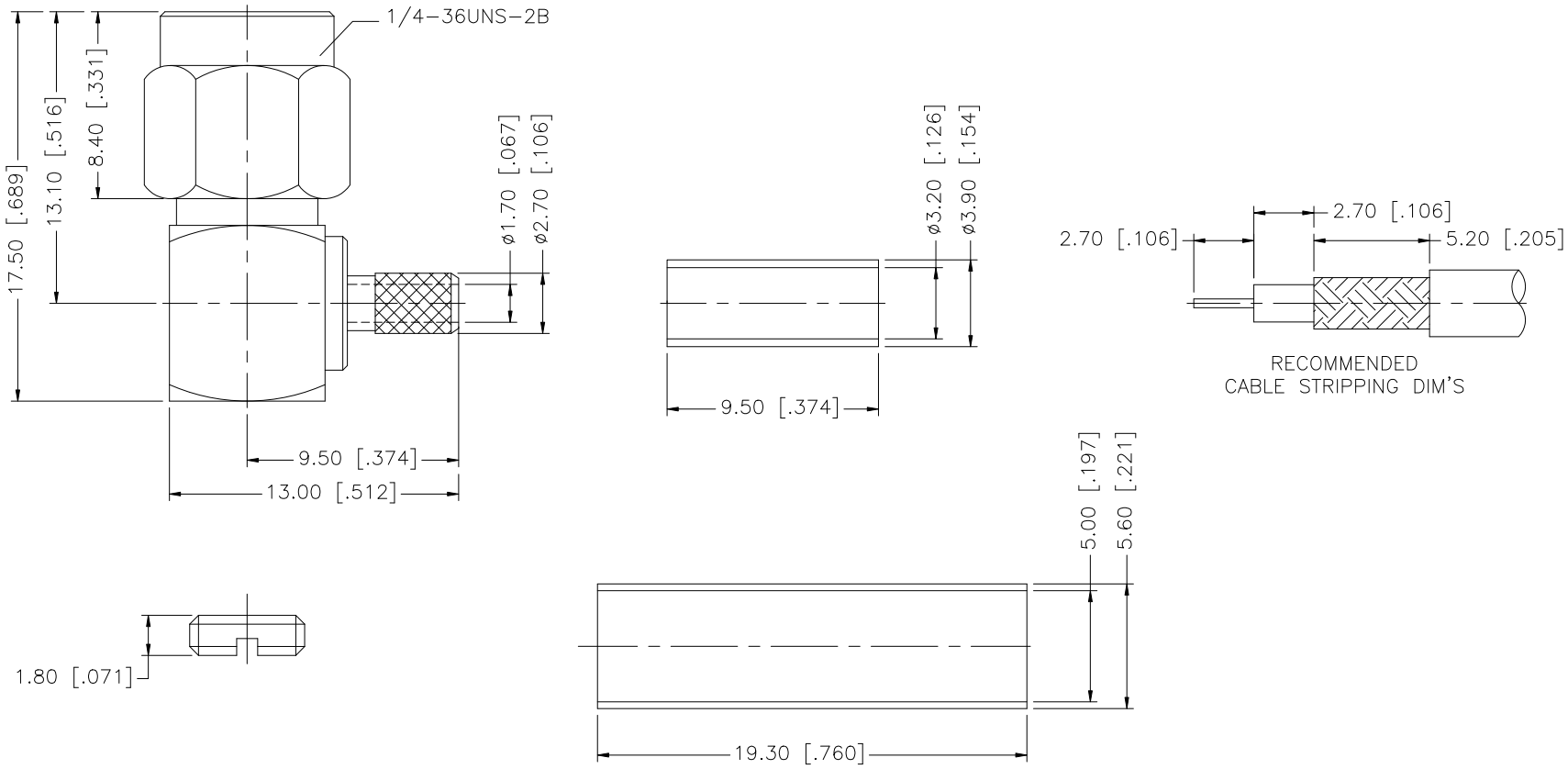


NOTES:

1. CRIMPED FERRULE HEX CRIMP SIZE .128"

| | DESCRIPTION | MATERIAL | FINISH | QTY |
|---|---|---|---|---|
| 8 | | | | |
| 7 | HEAT SHRINK TUBE | | | 1 |
| 6 | FERRULE | COPPER | GOLD | 1 |
| 5 | GASKET | SILICONE | RED | 1 |
| 4 | CONTACT PIN | BRASS | GOLD | 1 |
| 3 | INSULATOR | TEFLON | NATURAL | 1 |
| 2 | HOUSING W/BARREL | BRASS | GOLD | 1 |
| 1 | SHELL | BRASS | GOLD | 1 |

UNLESS OTHERWISE SPECIFIED DIMENSIONS ARE IN MILLIMETERS. DIMENSIONS IN [ ] ARE IN INCHES AND FOR CUSTOMER REFERANCE ONLY.

UNLESS OTHERWISE SPECIFIED TOLERANCES FOR MILLIMETERS ARE:
0.5 – 8mm ± 0.20mm
8 – 30mm ± 0.40mm
30 – 120mm ± 0.50mm

UNLESS OTHERWISE SPECIFIED TOLERANCES FOR INCHES ARE:
.020 – .315 = ± 0.007"
.315 – 1.180 = ± 0.015"
1.180 – 4.724 = ± 0.020"

DO NOT SCALE DRAWING

| APPROVALS | | DATE |
|---|---|---|
| DRAWN | G.R.S. | 04/27/08 |
| CHECKED | | |
| ISSUED | | |
| SHEET | 1 OF 1 | |

CAD FILE C:/132/132123.DWG

# Amphenol Connex

PART DESCRIPTION
SMA R/A CRIMP PLUG
(FOR RG–174/U, 188A/U, 316/U CABLE)

PART NO. 132123

| DWG. NO. | REV. | SIZE | SCALE |
|---|---|---|---|
| 132123.DWG | C | A | NA |