THIS DRAWING IS UNPUBLISHED. RELEASED FOR PUBLICATION 2017
© COPYRIGHT 2017 BY - TE CONNECTIVITY ALL RIGHTS RESERVED.

LOC	DIST

REVISIONS

P	LTR	DESCRIPTION	DATE	DWN	APVD
	E1	REVISED PER ECO-13-013495	20JUN2013	JA	DH
	F	REVISED PER PCN E-17-006278	13APR2017	CM	DM

6 SEAL TYPE	CONTACT SIZE	MIN. INSUL. OD [mm]	MAX. INSUL. OD [mm]	WIRE RANGE [mm²] REF ONLY 4
NORMAL	16	.100 [2.540]	.134 [3.404]	14-18 AWG [2.0-.75]
E	16	.053 [1.346]	.120 [3.048]	14-20 AWG [2.0-.50]
T	16	.088 [2.235]	.134 [3.404]	14-20 AWG [2.0-.50]

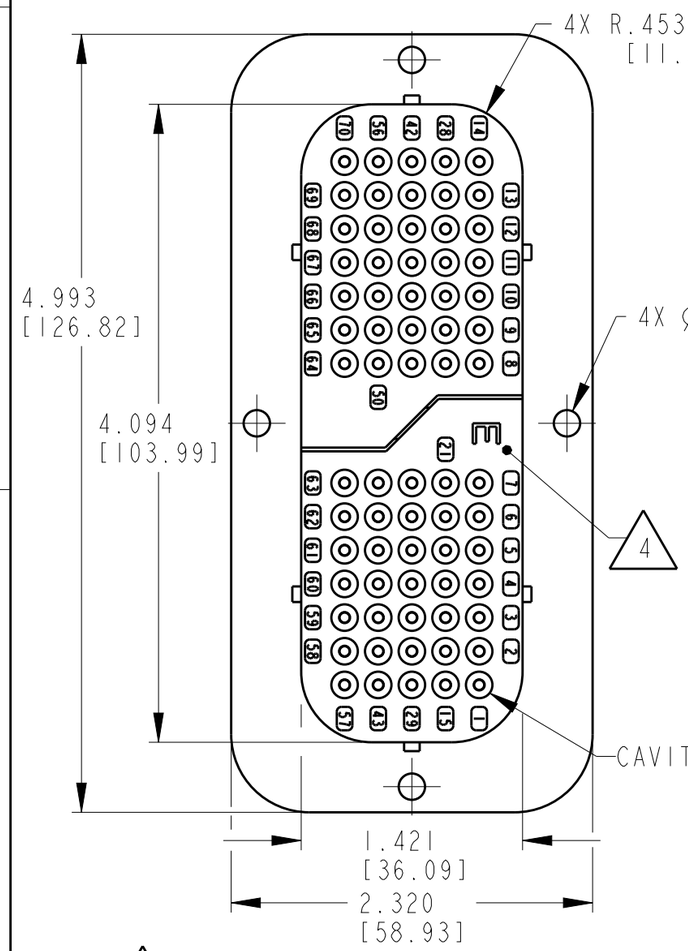

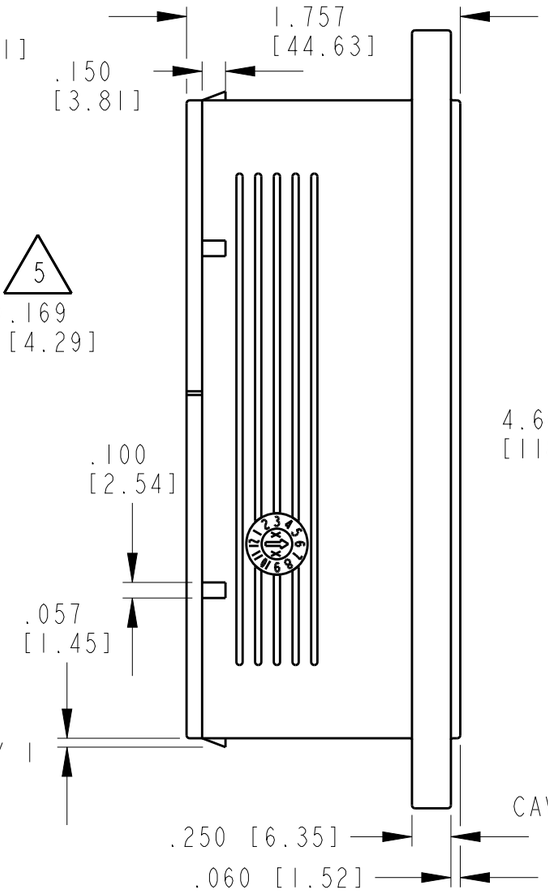

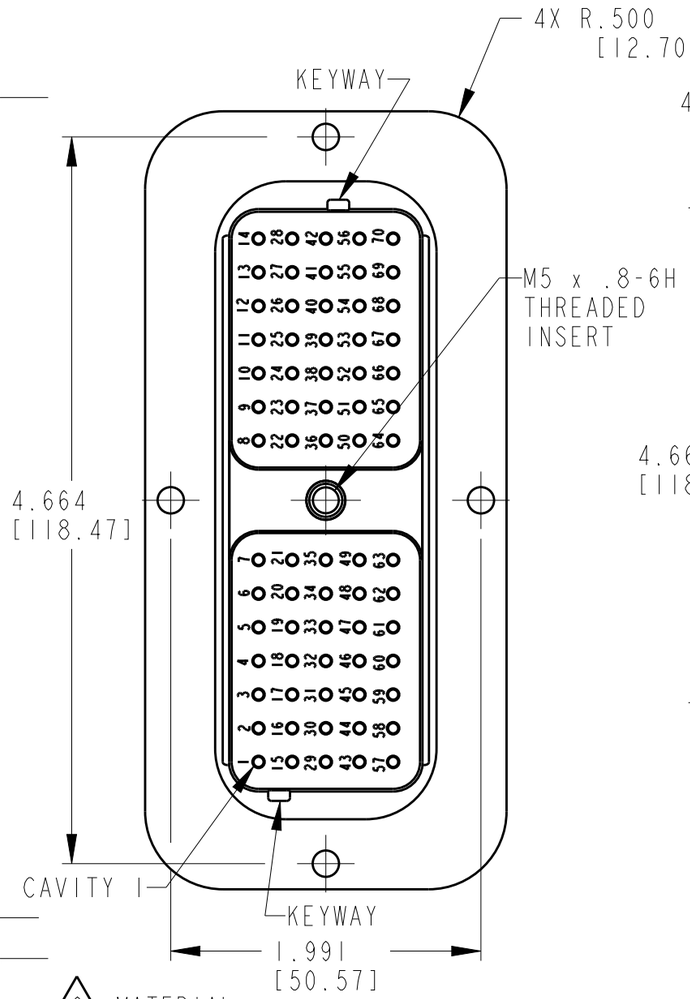

RECOMMENDED CUTOUT

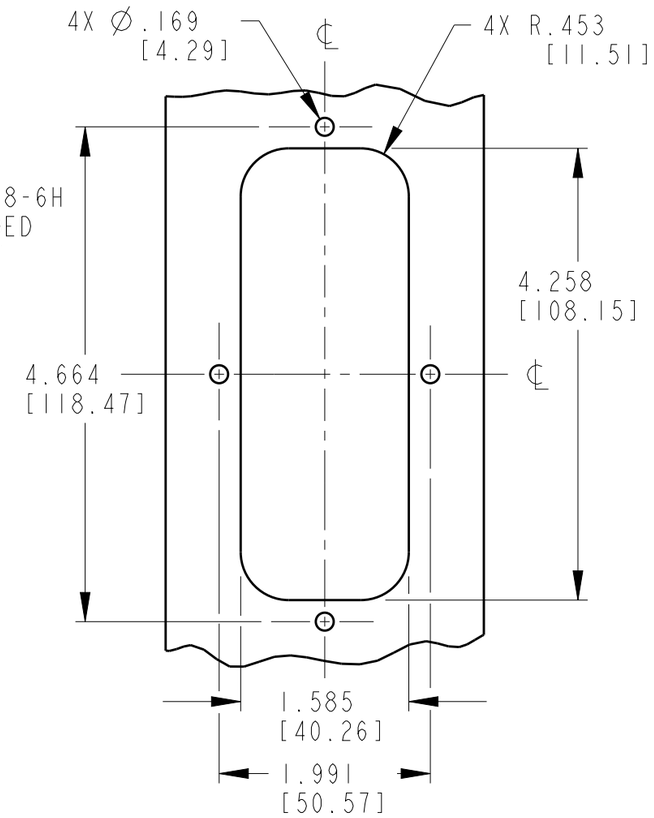

TE INTERNAL PN	DEUTSCH PN
DRC12-70PA	DRC12-70PA
DRC12-70PAE	DRC12-70PAE
DRC12-70PAT	DRC12-70PAT

5. RECOMMENDED SCREW: 8-32 [M4]. TORQUE: 20-25 IN-LB [2.26-2.82 Nm].

4 WHEN X = E: LETTER "E" IDENTIFIES "E" WIRE SEAL.
WHEN X = T: BROWN WELD CAPS IDENTIFIES "T" WIRE SEAL
WHEN X = BLANK: IDENTIFIES "NORMAL" WIRE SEAL

3. THIS PART MATES WITH DRC16-70SAX-XXXX.
(XXXX= ALL MODIFICATIONS) CONSULT FACTORY FOR MODS.

2. RECEPTACLE IS SUPPLIED WITH DUST CAP (NOT SHOWN).

NOTES: 1. DIMENSION TOLERANCE: CUTOUT: ±.010 [.25].

6 MATERIAL:
HOUSING: PPS GF40 (BLACK)
GROMMET: VMQ (RED-ORANGE)
THREADED INSERT: STAINLESS STEEL.

THIS DRAWING IS A CONTROLLED DOCUMENT.

DIMENSIONS: INCHES[mm]

TOLERANCES UNLESS OTHERWISE SPECIFIED:
0 PLC ±
1 PLC ±
2 PLC ±
3 PLC ±.025 [.64]
4 PLC ±
ANGLES ±0°30'0"

MATERIAL 6

FINISH

DWN 20JUN2013 JAIME C. APOSTOL
CHK 20JUN2013 DANIEL HASIBUAN
APVD 20JUN2013 DANIEL HASIBUAN

PRODUCT SPEC 0425-015-0000
APPLICATION SPEC 0425-015-0000
WEIGHT 192.71g

TE Connectivity

NAME RECEPTACLE, FLANGED, 70 PIN KEY A

SIZE	CAGE CODE	DRAWING NO	RESTRICTED TO
A3	4AFU8	C-DRC12-70PAX	-

CUSTOMER DRAWING | SCALE 1:1 | SHEET 1 OF 1 | REV F

1470-19 (3/11)