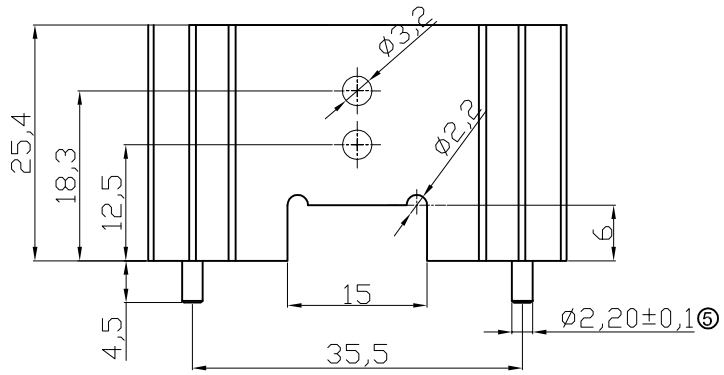


V7466W

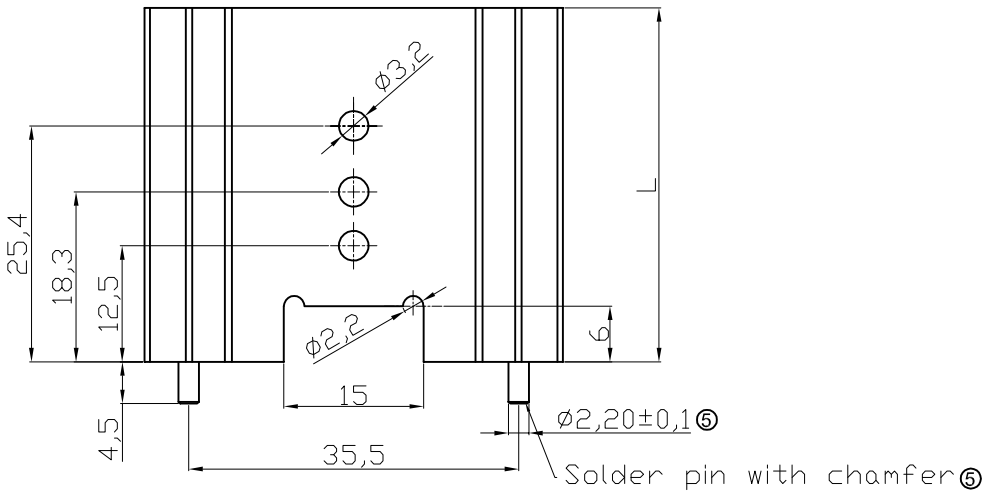


V7466X/Y/Z

Material : AL 6063-T5
Finished: Black Anoized
⑥ Pin: Fe, Tin plated

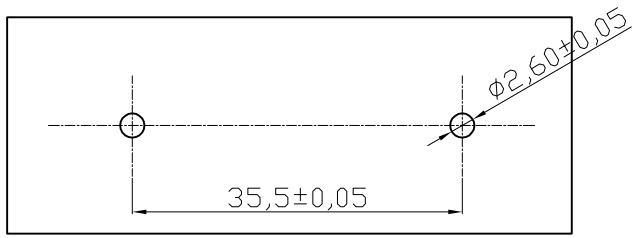


⑤ Recommended PCB Layout

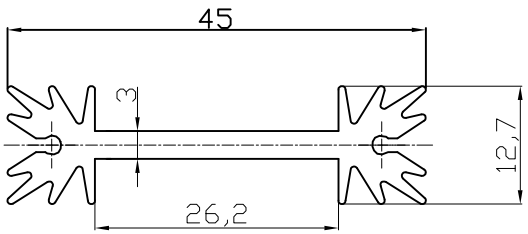


| Option | L | Thermal resistance(K/W) |
|---|---|---|
| V7466W | 25.4 | 8.2 |
| V7466X | 38.1 | 7 |
| V7466Y | 50.8 | 6.2 |
| V7466Z | 63.5 | 5.6 |

**RoHS compliant**
**Unit: mm**

| | |
|---|---|
| Scale | FREE |
| TOLERANCE | |
| | |
| | |
| UNIT | ±0.2 |
| DIM | Tol |
| X.° | ±X° |
| X.X° | ±X° |
| Angle | TOL |

| Id. | Modification | Date | Name |
|---|---|---|---|
| ⑥ | Add solder pin information | 22.03.2017 | Amy |
| ⑤ | Add PCB layout information | 24.02.2014 | Amy |
| ④ | Change production plant | 07.06.2013 | Amy |
| ③ | Modify drawing layout | 08.03.2010 | Dean |
| ② | Update | 11.08.2009 | Dean |
| ① | Drawn | 11.08.2009 | Storb |

| | Date | Name |
|---|---|---|
| Drawn | 31.10.2008 | Storb |
| Approved | 22.03.2017 | Amy |

ASSMANN wsw components

Customer-No.

ASSMANN WSW-No. V7466x

Drawing-No. ASS 0527 HS

rev06

Replace

Sheet