THIS DRAWING IS UNPUBLISHED. RELEASED FOR PUBLICATION ,19 .
© COPYRIGHT 19 BY AMP INCORPORATED. ALL RIGHTS RESERVED.

LOC	DIST
CE	16

REVISIONS

P	LTR	DESCRIPTION	DATE	DWN	APVD
	T	REV PER 0A00-0589-03	03MAY04	KG	SB
	T1	REVISED PER ECO-09-021826	12JAN10	KK	AEG

1. DIMENSIONS IN [ ] ARE IN INCHES.

2. BULK PACKAGE, 50 PIECES.

3. BULK PACKAGE 100 PIECES.

4. BULK PACKAGE, 50 PIECES PER TRAY.

5. MATERIAL:
   HOUSING: BRASS
   SLEEVE: PHOSPHOR BRONZE
   SLEEVE: ZIRCONIA
   SCREW: STAINLESS STEEL
   DUST COVER:PVC, COLOR: RED, NON-FR

6. FINISH:
   HOUSING:NICKEL

7. OBSOLETE PARTS: OBSOLETE CIS STREAMLINING PER D.RENAUD/D.SINISI

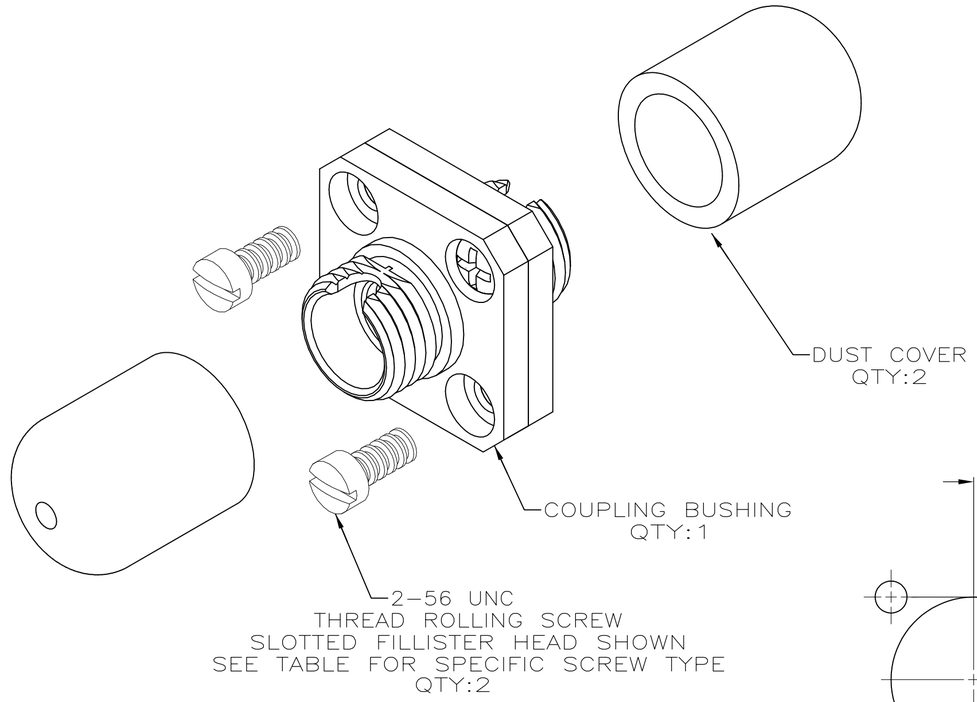

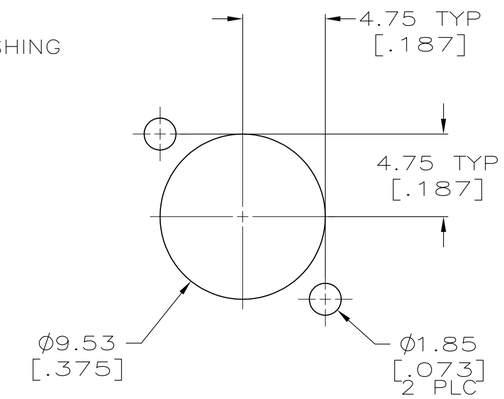

RECOMMENDED PANEL CUTOUT
MAX PANEL THICKNESS 1.7[.067]

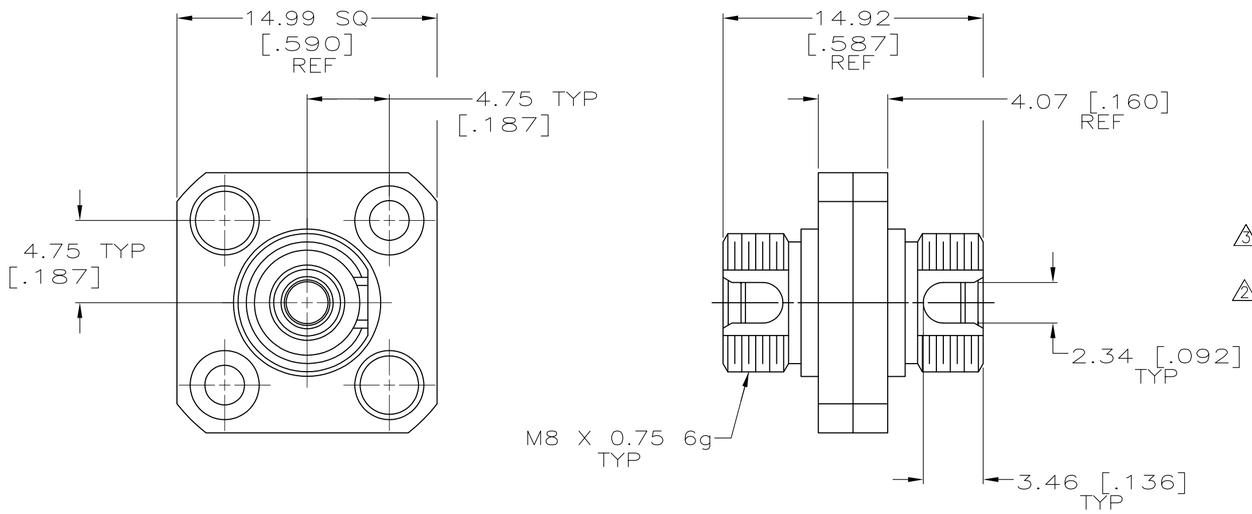

ADAPTER

2 OBSOLETE	CROSS-RECESSED FILLISTER HEAD	CERAMIC	501506-8
4	NO SCREWS SUPPLIED	METAL	501506-7
3 OBSOLETE	NO SCREWS SUPPLIED	METAL	501506-6
3 SUPERSEDED BY 5501506-5	NO SCREWS SUPPLIED	CERAMIC	~~501506-5~~
2	SLOTTED FILLISTER HEAD	METAL	501506-4
2 SUPERSEDED BY 5501506-1	SLOTTED FILLISTER HEAD	CERAMIC	~~501506-3~~
	SLOTTED FILLISTER HEAD	METAL	501506-2
	SLOTTED FILLISTER HEAD	CERAMIC	501506-1
	SCREW TYPE	ALIGNMENT SLEEVE	PART NUMBER

THIS DRAWING IS A CONTROLLED DOCUMENT.

DIMENSIONS: mm

TOLERANCES UNLESS OTHERWISE SPECIFIED:
0 PLC ±-
1 PLC ±-
2 PLC ±-
3 PLC ±-
4 PLC ±-
ANGLES ±-

MATERIAL 5 | FINISH 6

DWN	J.GERACE	06JAN87
CHK	J.ZEIDERS	06JAN87
APVD	A.PLOTTS	06JAN87
PRODUCT SPEC	—	
INSTRUCTION SHEET	—	
WEIGHT	—	

AMP Incorporated
Harrisburg, PA 17105-3608

NAME: ADAPTER KIT, FC, OPTIMATE

SIZE	CAGE CODE	DRAWING NO	RESTRICTED TO
A2	00779	C-501506	—

CUSTOMER DRAWING | SCALE NTS | SHEET 1 OF 1 | REV T1

501506