Feb.1.2018 Copyright 2018 HIROSE ELECTRIC CO., LTD. All Rights Reserved.

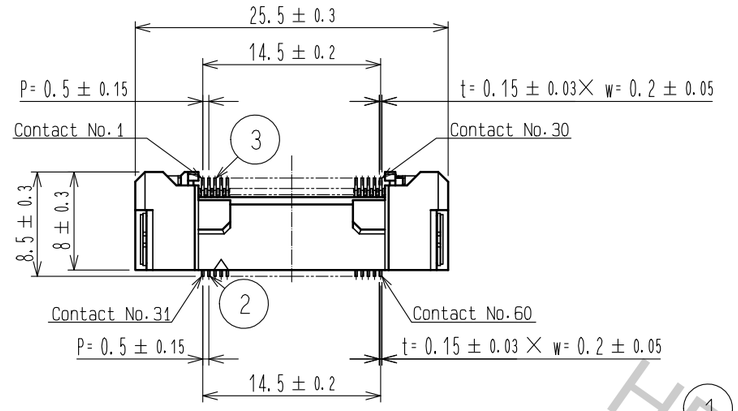

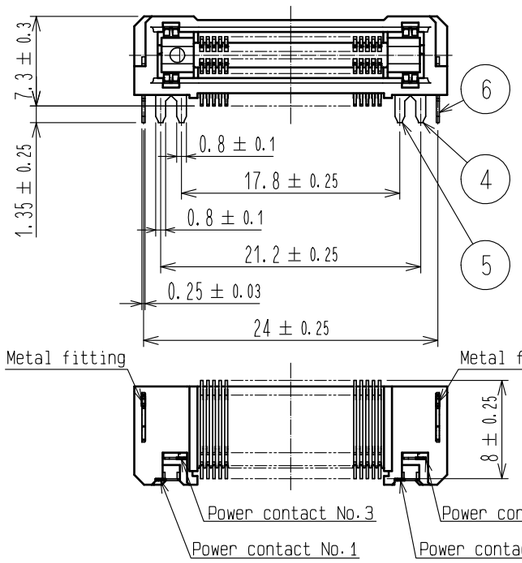

RECOMMENDED LAND PATTERN DIMENSION OF PCB
(PCB THICKNESS: t=1.6mm)

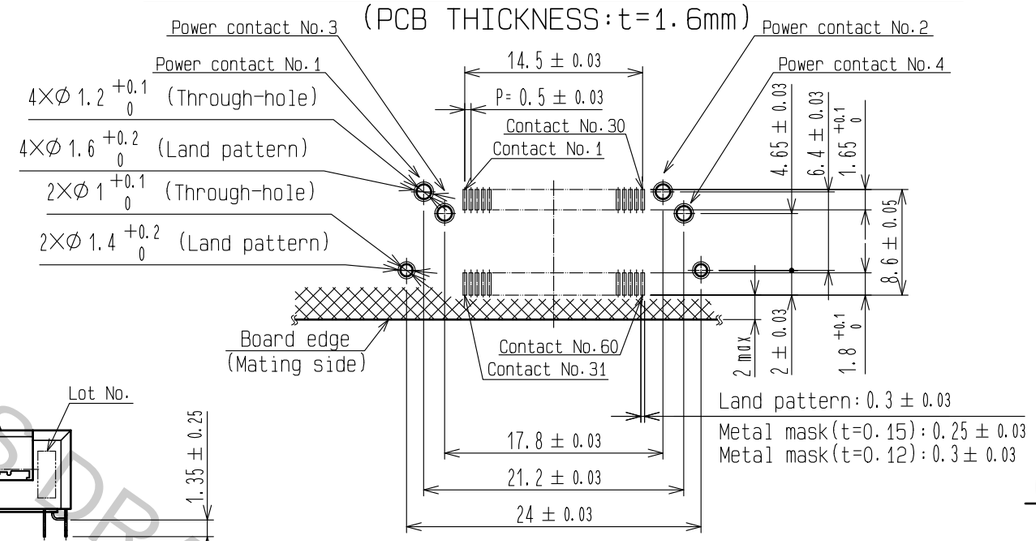

3 FLOATING RANGE

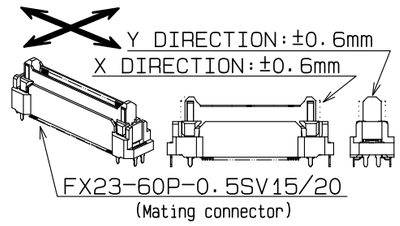

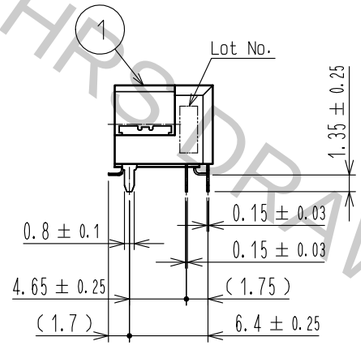

CROSS SECTION OF MATING
(No scale)

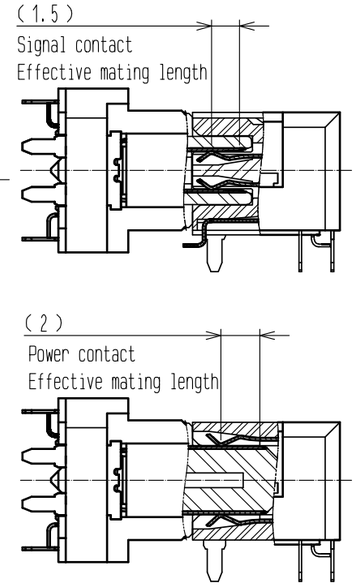

PCB DISTANCE(No scale)

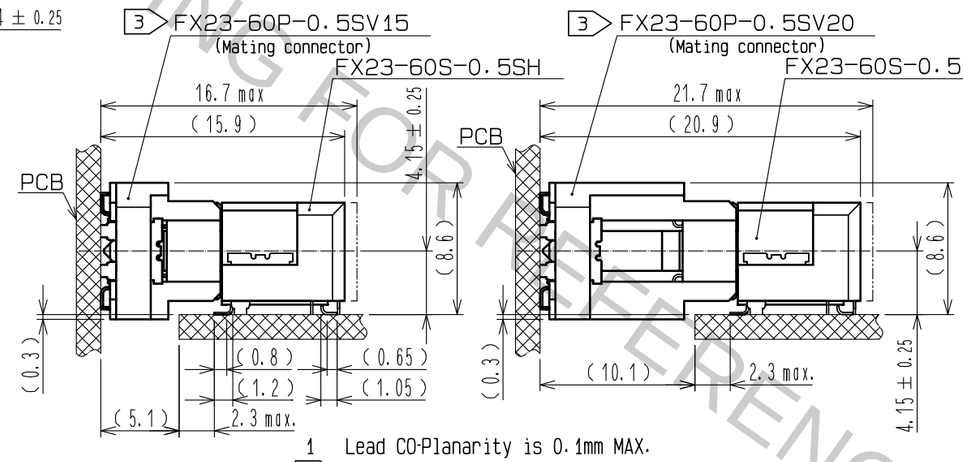

2 DRAWING FOR PACKING(No scale)

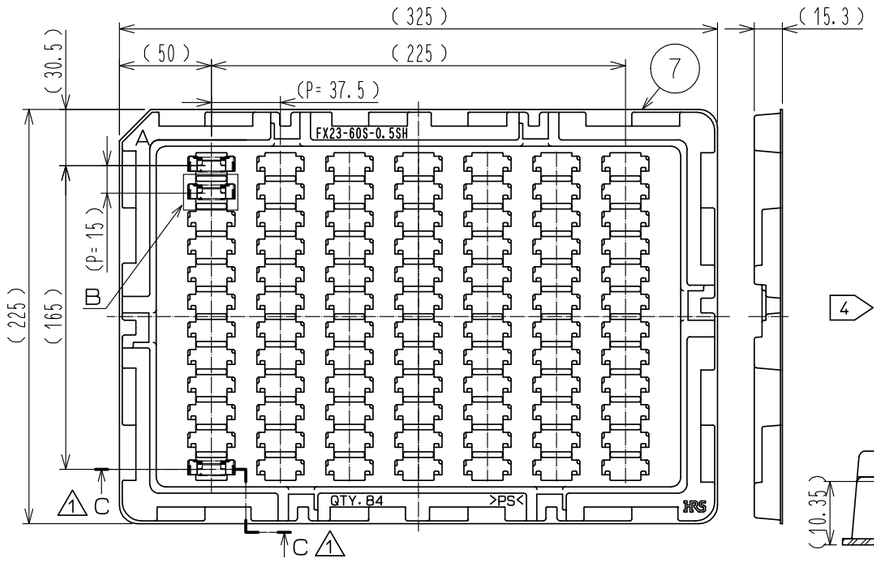

B(1:1)

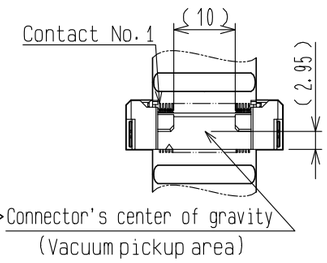

1 C-C(1:1)

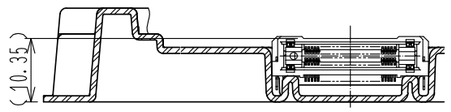

1 Lead CO-Planarity is 0.1mm MAX.
2 This is packaged in tray.(84pcs/tray)
3 Floating range of this connector is ±0.6mm MAX.
4 It shows the vacuum pickup area.
5 Blemish and hit mark can be occured through out the manufacturing process which doesn't affect quality level.
6 The dimensions in parentheses are for references.

NO.	MATERIAL	FINISH . REMARKS
2, 3	COPPER ALLOY	CONTACT AREA:GOLD 0.1μm LEAD AREA:GOLD 0.03μm UNDER PLATING:NICKEL 1.3μm
1	LCP	BLACK UL94V-0

NO.	MATERIAL	FINISH . REMARKS
7	POLYSTYRENE	(TRAY)
6	BRASS	LEAD AREA:TIN-PLATING 3μm UNDER PLATING:NICKEL 1μm
4, 5	COPPER ALLOY	CONTACT AREA:GOLD 0.1μm LEAD AREA:TIN-PLATING 1μm UNDER PLATING:NICKEL 1.3μm

UNITS	SCALE	COUNT	DESCRIPTION OF REVISIONS	DESIGNED	CHECKED	DATE
mm	2 : 1	1 3	DIS-F-00001541	TS. OONO	KN. SHIBUYA	16. 08. 23

HIROSE ELECTRIC CO., LTD.

APPROVED	: HS. OKAWA	14. 12. 12	DRAWING NO.	EDC3-353567-00
CHECKED	: KN. SHIBUYA	14. 12. 12	PART NO.	FX23-60S-0.5SH
DESIGNED	: TS. OONO	14. 12. 12	CODE NO.	CL573-3403-4-00
DRAWN	: TS. OONO	14. 12. 12		1/1

HRS DRAWING FOR REFERENCE