SIGN	DATE	DESCRIPTION	APPROVER

THIS IS CAD DRAWING, DO NOT REVISE MANUALLY!!!

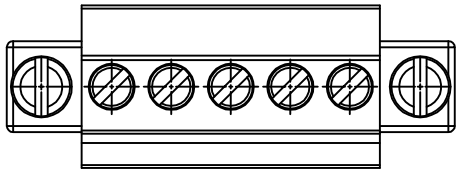

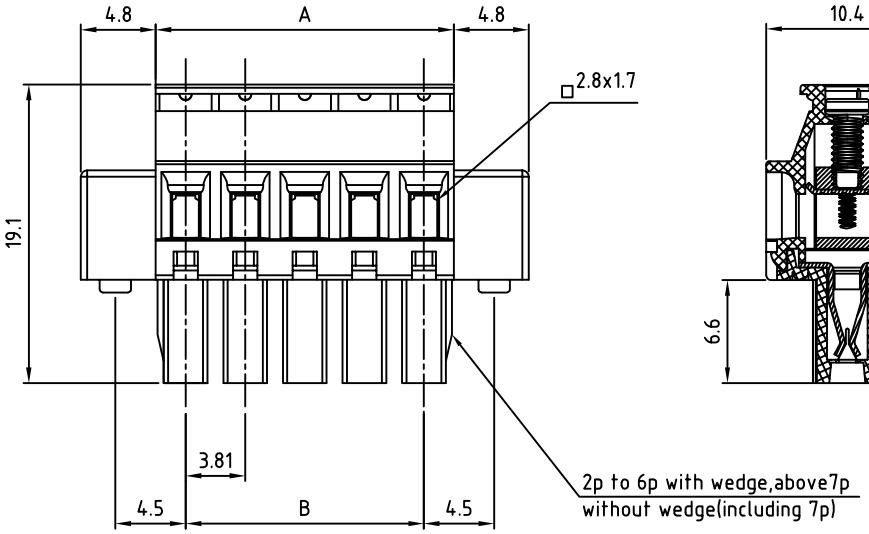

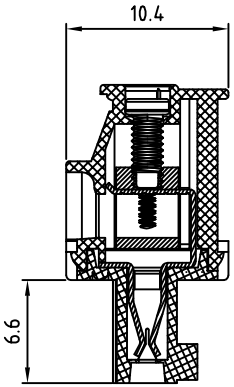

Material

- Terminal body (metal housing): Brass(CuZn)
- Terminal screw: Steel Zinc plating "-" slot type
- With flange screw : steel M2.5
- Wire guard: PhBz Tin plated
- Insulator (housing): Thermoplastic (UL94V-0)

Electrical cULus/VDE

- Voltage rating: 300V/300V
- Current rating: 8A /10A
- Wire range: 1.5mm²
  Solid wire(AWG): 16-28
  Stranded wire(AWG): 16-28
- Torque: 1.7Lb-In / 0.2N.m
- Screw: M2
- Wire strip length: 6-7mm
- Withstanding Voltage: 1.6KV / 2.5KV
- Operating temperature: -30° C to +105° C
- Safety approval:
  RoHS Compliant

PART NUMBER:

OSTTSXX315D

No. of Poles
- 02 2 Poles
- 03 3 Poles
- ... ...
- 24 24 Poles

COLOR
- 0: Black
- 5: Green (Standard)
- 6: Blue
- 8: Grey

N = Number of poles

DIMENSION

A	NX3.81
B	(N-1)X3.81

THESE DRAWINGS AND SPECIFICATIONS ARE THE PROPERTY OF ON-SHORE TECHNOLOGY, INC. AND SHALL NOT BE REPRODUCED, COPIED OR USED IN ANY MANNER WITHOUT THE PRIOR WRITTEN CONSENT OF ON-SHORE TECHNOLOGY, INC.

ON-SHORE TECHNOLOGY, INC.

TITLE	OSTTS-3.81mm Series With flange (for latch on back side)				
PART NO.	OSTTSXX315D			DWG NO.	OSTTSXX315D.DWG
APPROVED	CHECKED	DESIGNED	DRAWN	CUST NO.	
Shi Jun 2006.10.25	Marvin 2005.10.25	Marvin 2005.10.25	Marvin 2005.10.25	UNIT: mm SCALE: NONE SHEET: 01/01 REV.: D	

Tolerance	
X.	±0.50
X.X	±0.30
X.XX	±0.10
X°	±1°