THIS DRAWING IS UNPUBLISHED. RELEASED FOR PUBLICATION -,- .
© COPYRIGHT - By -2123 ALL RIGHTS RESERVED.

LOC	DIST
DF	DO

REVISIONS

P	LTR	DESCRIPTION	DATE	DWN	APVD
	G	REVISED PER ECO-14-013367	09OCT14	MGM	CT

1. THE CONNECTOR DESCRIBED IN THIS DOCUMENT WILL MATE WITH ANY RECEPTACLE CONNECTOR WITH THE SAME INSERT ARRANGEMENT.

2. MARKED WITH .047-.062 [1.19-1.57] HIGH CHARACTERS. FAR SIDE REFERS TO THE WIDE SIDE OF THE KEYSTONE. NEAR SIDE REFERS TO THE NARROW SIDE OF THE KEYSTONE. WHEN SPACE IS LIMITED MARKING CAN BE SPLIT BETWEEN FRONT AND REAR SHELL.

3. UL/CSA DESIGNATION MARKED IN THIS AREA (DOES NOT APPLY TO -6 OR -12).

4. CONNECTOR ASSEMBLY WITHOUT CONTACTS, MFG'S P/N 204370-2. MUST BE ORDERED SEPARATELY.

5. CONNECTOR ASSEMBLY SUPPLIED WITH CONTACTS, MFG'S P/N 204370-2. PACKAGED IN A SEPARATE CONTAINER. QTY = NO. OF POSN. (SEE TABLE).

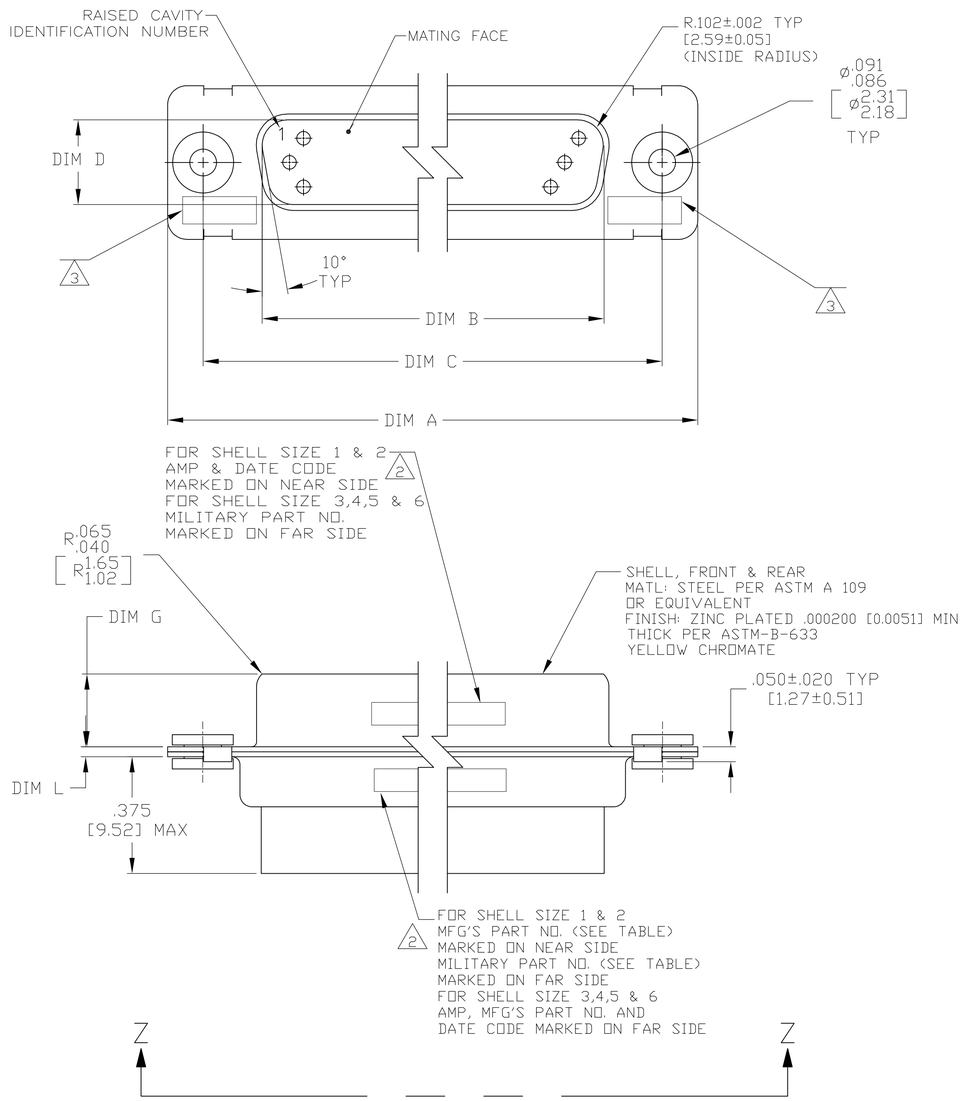

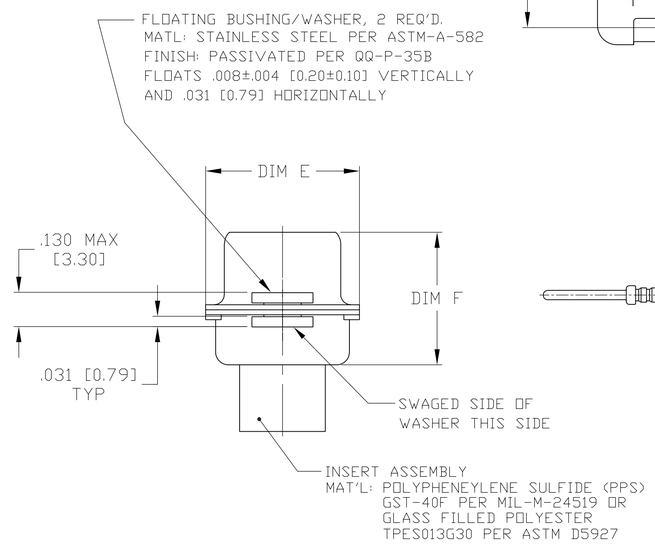

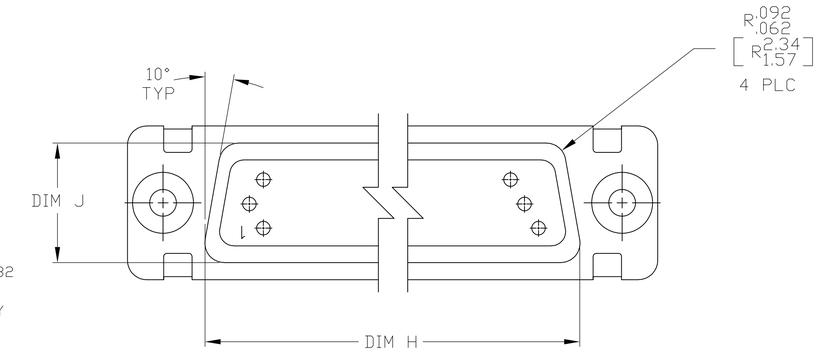

VIEW Z—Z

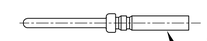

5 SIZE 20 PIN CONTACT
MATERIAL: COPPER ALLOY PER MIL-C-39029 & MIL-DTL-24308.
PLATING: GOLD PER ASTM-B-488 (TYPEII) OVER NICKEL PER QQ-N-290.

	M24308/4-312Z	M24308/4-312Z	1-1757825-2	.049 [1.24] .029 [0.74]	.606 [15.39] .586 [14.88]	2.312 [58.72] 2.292 [58.22]	.236 [5.99] .224 [5.69]	.436 [11.07] .416 [10.57]	.683 [17.35] .653 [16.59]	.508 [12.90] .498 [12.65]	2.505 [63.63] 2.495 [63.37]	2.217 [56.31] 2.207 [56.06]	2.744 [69.70] 2.714 [68.94]	MS14004-1	104	6	1-1757825-2
5	M24308/4-311Z	M24308/4-311Z	1-1757825-1	.049 [1.24] .029 [0.74]	.544 [13.82] .524 [13.31]	2.188 [55.58] 2.168 [55.07]	.236 [5.99] .224 [5.69]	.436 [11.07] .416 [10.57]	.620 [15.75] .590 [14.99]	.446 [11.33] .436 [11.07]	2.411 [61.24] 2.401 [60.99]	2.084 [52.93] 2.074 [52.68]	2.650 [67.31] 2.620 [66.55]	MS18277-2	78	5	1-1757825-1
5	M24308/4-310Z	M24308/4-310Z	1-1757825-0	.049 [1.24] .029 [0.74]	.432 [10.97] .412 [10.46]	2.282 [57.96] 2.262 [57.45]	.236 [5.99] .224 [5.69]	.436 [11.07] .416 [10.57]	.509 [12.93] .479 [12.17]	.334 [8.48] .324 [8.23]	2.505 [63.63] 2.495 [63.37]	2.187 [55.55] 2.177 [55.30]	2.744 [69.70] 2.714 [68.94]	MS18276-2	62	4	1-1757825-0
5	M24308/4-309Z	M24308/4-309Z	1757825-9	.049 [1.24] .029 [0.74]	.432 [10.97] .412 [10.46]	1.635 [41.53] 1.615 [41.02]	.236 [5.99] .224 [5.69]	.436 [11.07] .416 [10.57]	.509 [12.93] .479 [12.17]	.334 [8.48] .324 [8.23]	1.857 [47.17] 1.847 [46.91]	1.539 [39.09] 1.529 [38.84]	2.103 [53.42] 2.073 [52.65]	MS18275-2	44	3	1757825-9
5	M24308/4-308Z	M24308/4-308Z	1757825-8	.040 [1.02] .020 [0.51]	.432 [10.97] .412 [10.46]	1.093 [27.76] 1.073 [27.25]	.238 [6.05] .229 [5.82]	.432 [10.97] .412 [10.46]	.509 [12.93] .479 [12.17]	.334 [8.48] .324 [8.23]	1.317 [33.45] 1.307 [33.20]	.999 [25.37] .989 [25.12]	1.556 [39.52] 1.526 [38.76]	MS18274-2	26	2	1757825-8
5	M24308/4-307Z	M24308/4-307Z	1757825-7	.040 [1.02] .020 [0.51]	.432 [10.97] .412 [10.46]	.769 [19.53] .749 [19.02]	.238 [6.05] .229 [5.82]	.432 [10.97] .412 [10.46]	.509 [12.93] .479 [12.17]	.334 [8.48] .324 [8.23]	.989 [25.12] .979 [24.87]	.671 [17.04] .661 [16.79]	1.228 [31.19] 1.198 [30.43]	MS18273-2	15	1	1757825-7
4	M24308/4-334Z	M24308/4-312Z	1-1757825-2	.049 [1.24] .029 [0.74]	.606 [15.39] .586 [14.88]	2.312 [58.72] 2.292 [58.22]	.236 [5.99] .224 [5.69]	.436 [11.07] .416 [10.57]	.683 [17.35] .653 [16.59]	.508 [12.90] .498 [12.65]	2.505 [63.63] 2.495 [63.37]	2.217 [56.31] 2.207 [56.06]	2.744 [69.70] 2.714 [68.94]	MS14004-1	104	6	1757825-6
4	M24308/4-333Z	M24308/4-311Z	1-1757825-1	.049 [1.24] .029 [0.74]	.544 [13.82] .524 [13.31]	2.188 [55.58] 2.168 [55.07]	.236 [5.99] .224 [5.69]	.436 [11.07] .416 [10.57]	.620 [15.75] .590 [14.99]	.446 [11.33] .436 [11.07]	2.411 [61.24] 2.401 [60.99]	2.084 [52.93] 2.074 [52.68]	2.650 [67.31] 2.620 [66.55]	MS18277-2	78	5	1757825-5
4	M24308/4-332Z	M24308/4-310Z	1-1757825-0	.049 [1.24] .029 [0.74]	.432 [10.97] .412 [10.46]	2.282 [57.96] 2.262 [57.45]	.236 [5.99] .224 [5.69]	.436 [11.07] .416 [10.57]	.509 [12.93] .479 [12.17]	.334 [8.48] .324 [8.23]	2.505 [63.63] 2.495 [63.37]	2.187 [55.55] 2.177 [55.30]	2.744 [69.70] 2.714 [68.94]	MS18276-2	62	4	1757825-4
4	M24308/4-331Z	M24308/4-309Z	1757825-9	.049 [1.24] .029 [0.74]	.432 [10.97] .412 [10.46]	1.635 [41.53] 1.615 [41.02]	.236 [5.99] .224 [5.69]	.436 [11.07] .416 [10.57]	.509 [12.93] .479 [12.17]	.334 [8.48] .324 [8.23]	1.857 [47.17] 1.847 [46.91]	1.539 [39.09] 1.529 [38.84]	2.103 [53.42] 2.073 [52.65]	MS18275-2	44	3	1757825-3
4	M24308/4-330Z	M24308/4-308Z	1757825-8	.040 [1.02] .020 [0.51]	.432 [10.97] .412 [10.46]	1.093 [27.76] 1.073 [27.25]	.238 [6.05] .229 [5.82]	.432 [10.97] .412 [10.46]	.509 [12.93] .479 [12.17]	.334 [8.48] .324 [8.23]	1.317 [33.45] 1.307 [33.20]	.999 [25.37] .989 [25.12]	1.556 [39.52] 1.526 [38.76]	MS18274-2	26	2	1757825-2
4	M24308/4-329Z	M24308/4-307Z	1757825-7	.040 [1.02] .020 [0.51]	.432 [10.97] .412 [10.46]	.769 [19.53] .749 [19.02]	.238 [6.05] .229 [5.82]	.432 [10.97] .412 [10.46]	.509 [12.93] .479 [12.17]	.334 [8.48] .324 [8.23]	.989 [25.12] .979 [24.87]	.671 [17.04] .661 [16.79]	1.228 [31.19] 1.198 [30.43]	MS18273-2	15	1	1757825-1
REMARKS	MILITARY P/N ON PACKAGE	MILITARY P/N ON CONNECTOR 2	MARKED 2 MFG'S PART NUMBER	L	J	H	G	F	E	D	C	B	A	INSERT ARRANGEMENT	NO OF POS	SHELL SIZE	PART NUMBER

THIS DRAWING IS A CONTROLLED DOCUMENT.

DIMENSIONS: INCHES

TOLERANCES UNLESS OTHERWISE SPECIFIED:
0 PLC ± –
1 PLC ± –
2 PLC ± –
3 PLC ± .005 [0.13]
4 PLC ± –
ANGLES ± 1°

MATERIAL: SEE CALLOUTS
FINISH: SEE CALLOUTS

DWN C.C.THOMAS 6-3-05
CHK D.MILLER 6-8-05
APVD D.MILLER 6-8-05
PRODUCT SPEC —
APPLICATION SPEC —
WEIGHT —

TE Connectivity

NAME: AMPLIMITE PLUG ASSY,SIZE 1 THRU 6 SERIES 90 WITH ZINC PLATING WITH FLOAT BUSHINGS

SIZE	CAGE CODE	DRAWING NO	RESTRICTED TO
A1	00779	C-1757825	—

CUSTOMER DRAWING | SCALE 4:1 | SHEET 1 OF 1 | REV G

4805 (3/11)