THIS DRAWING IS UNPUBLISHED. RELEASED FOR PUBLICATION -,- .
© COPYRIGHT - By - ALL RIGHTS RESERVED.

LOC	DIST
AF	50

REVISIONS

P	LTR	DESCRIPTION	DATE	DWN	APVD
	E	REVISED PER ECO-13-014735	19SEP2013	KH	MD

SUGGESTED MATING TAB

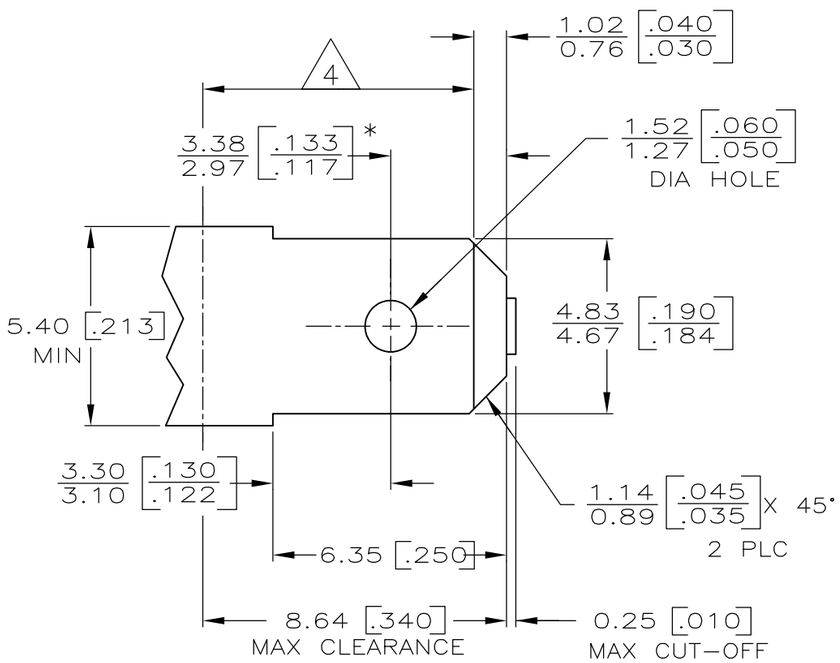

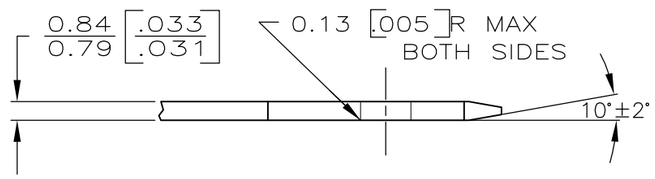

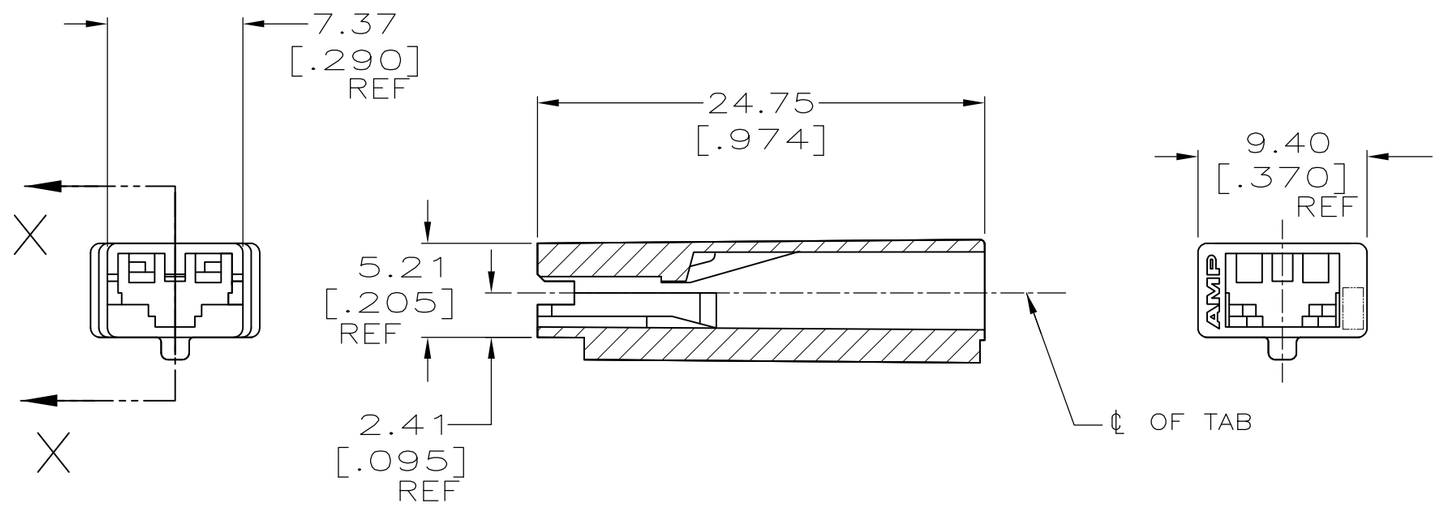

SECTION X-X

1 ACCEPTS CONTACTS FOR 0.81 [.032] THICK TABS ONLY. EXAMPLE, 63498, 173690.

2 PRELIMINARY - NOT FOR PRODUCTION

1 MATL: #2 HARD BRASS OR NICKEL PLATED STEEL.

2 NO BURRS PERMISSIBLE AT HOLE.

3 TIN PLATING IS REQUIRED ON BRASS WHEN TERMINAL TEMPERTURE IS OVER 225° F

4 MUST BE FLAT WITHIN 0.076[.003] OVER THIS LENGTH.

5 HOLE MUST BE SYMMETRICAL ABOUT TAB ℄ WITHIN 0.076[.003].

* TO BE USED ONLY WHEN SHOULDER IS ELIMINATED.

MATERIAL	PART NO.
66 NYLON, V0	521125-3
STANYL TW341	2 521125-2
6/6 NYLON	521125-1

THIS DRAWING IS A CONTROLLED DOCUMENT.

DIMENSIONS: mm [INCHES]

TOLERANCES UNLESS OTHERWISE SPECIFIED:

0 PLC	± -
1 PLC	± -
2 PLC	± 0.25 [.010]
3 PLC	± -
4 PLC	± -
ANGLES	± -

MATERIAL: SEE TABLE

FINISH: NATURAL

DWN	JR RUTH	11/15/96
CHK	MS FEHER	11/15/96
APVD	J GILLESPIE	11/15/96
PRODUCT SPEC	—	
APPLICATION SPEC	—	
WEIGHT	—	

TE Connectivity

NAME: HOUSING, POSITIVE-LOCK, 4.75 [.187] SERIES, MK II

SIZE	CAGE CODE	DRAWING NO	RESTRICTED TO
A3	00779	C-521125	—

CUSTOMER DRAWING | SCALE 3:1 | SHEET 1 OF 1 | REV E