N-Channel MOS FET

FKP250A

June, 2007

■Features

- ●Low on-resistance
- ●Low input capacitance
- ●Avalanche energy capability guaranteed

■Package---FM100 (TO-3P Full Mold)

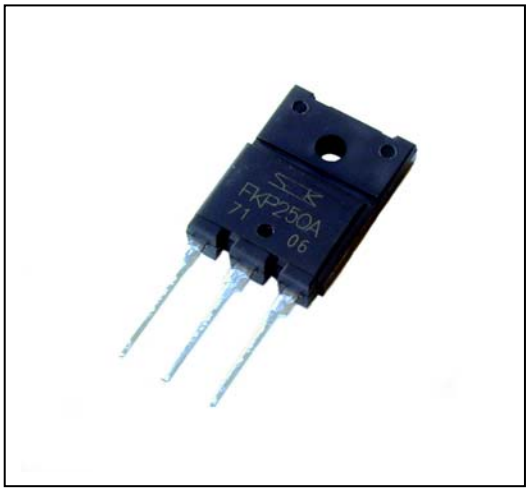

■Applications

- ●PDP driving
- ●High speed switching

■Equivalent circuit

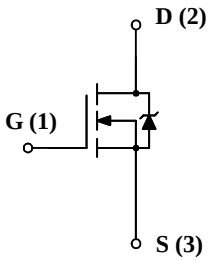

■Absolute maximum ratings

(Ta=25°C)

Parameter	Symbol	Rating	Unit
Drain to Source Voltage	VDSS	250	V
Gate to Source Voltage	VGSS	±30	V
Continuous Drain Current	ID	±50A	A
Pulsed Drain Current	ID(pulse) *1	±200A	A
Maximum Power Dissipation	PD	85 (Tc=25°C)	W
Single Pulse Avalanche Energy	EAS *2	400	mJ
Avalanche Current	IAS	50	A
Channel Temperature	Tch	150	°C
Storage Temperature	Tstg	−55 to 150	°C

*1 PW≤100μs, duty cycle≤1%

*2 VDD=20V, L=300μH, ILp=50A, unclamped, RG=50Ω, See Fig.1

Electrical characteristics

(Ta=25°C)

Parameter	Symbol	Test Conditions	Limits			Unit
			MIN.	TYP.	MAX.	
Drain to Source breakdown Voltage	V(BR)DSS	ID=100μA,VGS=0V	250			V
Gate to Source Leakage Current	IGSS	VGS=±30V			±100	nA
Drain to Source Leakage Current	IDSS	VDS=250V, VGS=0V			100	μA
Gate Threshold Voltage	VTH	VDS=10V, ID=1mA	3.0		4.5	V
Forward Transconductance	Re(Yfs)	VDS=10V, ID=25A	30	42		S
Static Drain to Source On-Resistance	RDS(on)	ID=25A, VGS=10V		37	43	mΩ
Input Capacitance	Ciss	VDS=25V VGS=0V f=1MHz		3800		pF
Output Capacitance	Coss			630		
Reverse Transfer Capacitance	Crss			210		
Turn-On Delay Time	td(on)	ID=25A, VDD≈125V RL=5Ω, VGS=10V RG=5Ω See Fig.2		40		ns
Rise Time	tr			110		
Turn-Off Delay Time	td(off)			160		
Fall Time	tf			90		
Source-Drain Diode Forward Voltage	VSD	ISD=50A,VGS=0V		1.0	1.5	V
Gate Threshold Voltage Temp. Coefficient	ΔVTH /ΔTch	VDS=10V, ID=1mA		-11		mV/°C

Characteristic Curves (Tc=25℃)

ID-VDS Characteristics (typical)

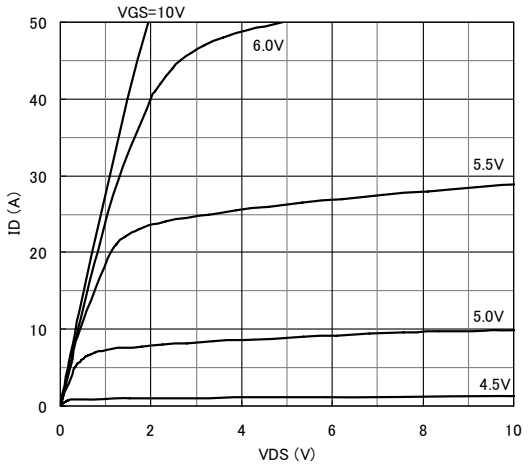

ID-VGS Characteristics (typical)

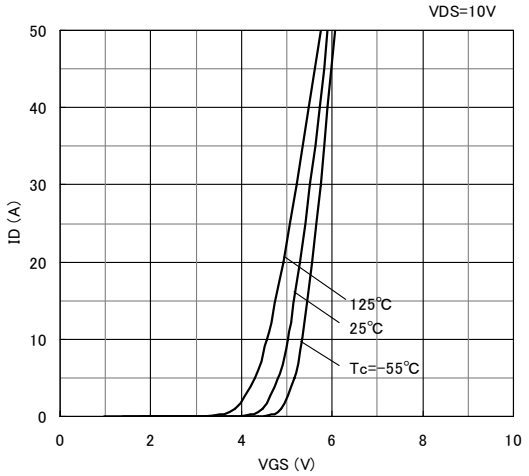

RDS(ON)-ID Characteristics (typical)

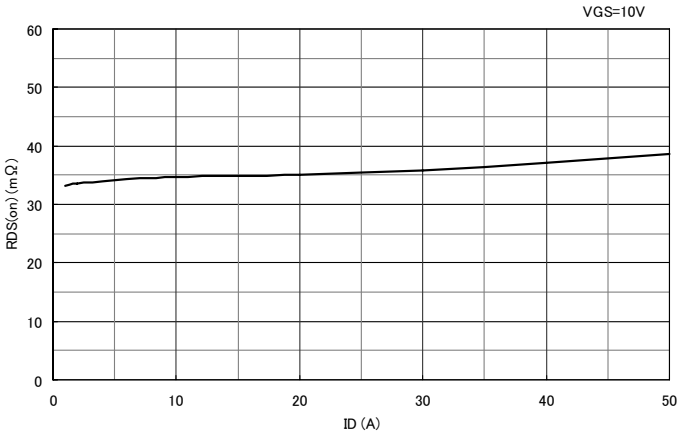

VDS-VGS Characteristics (typical)

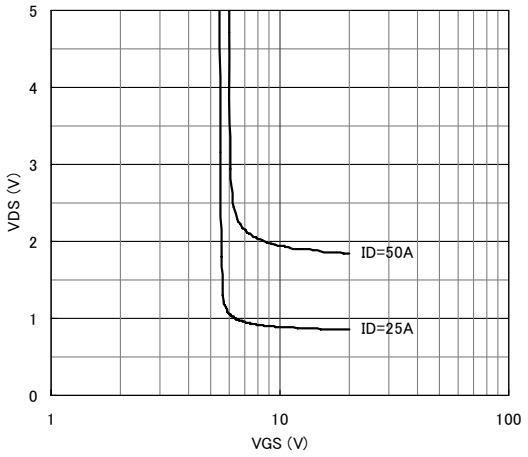

RDS(ON)-Tc Characteristics (typical)

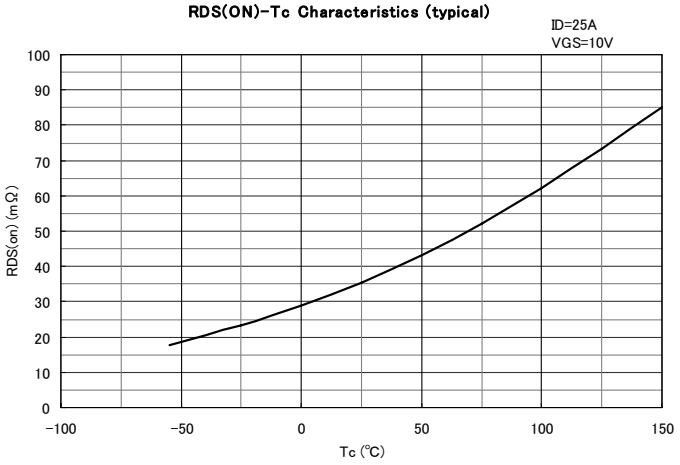

Characteristic Curves (Tc=25℃)

Re(yfs)-ID Characteristics (typical)

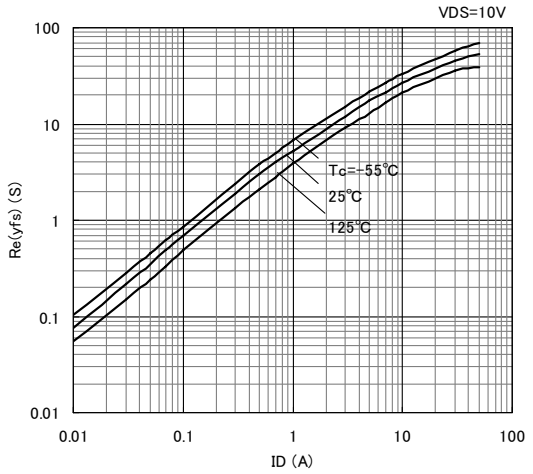

Capacitance-VDS Characteristics (typical)

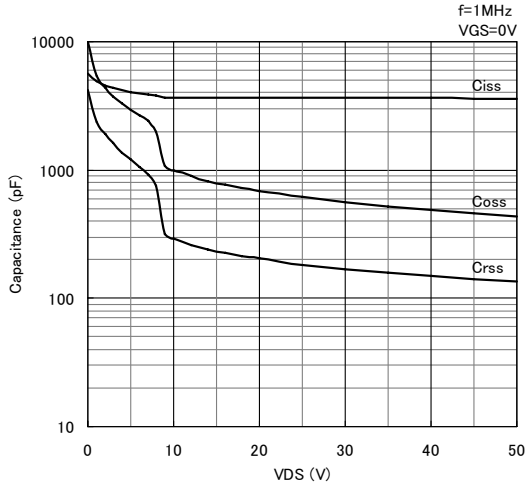

IDR-VSD Characteristics (typical)

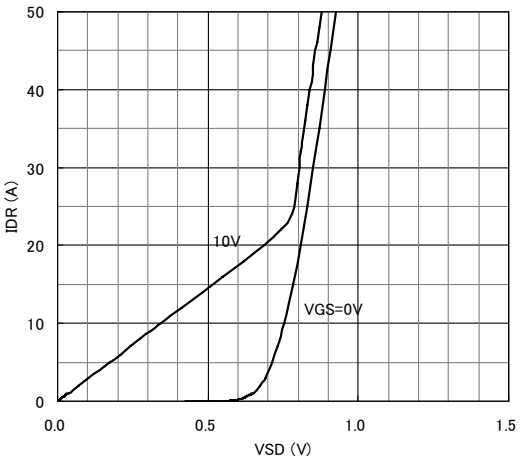

SAFE OPERATING AREA

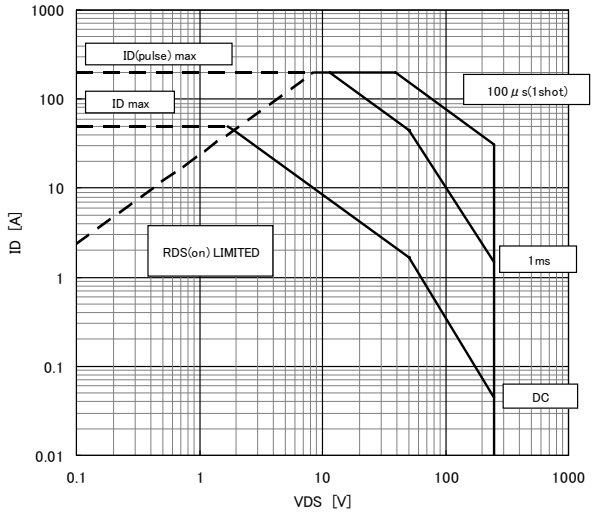

PD-Ta Characteristics

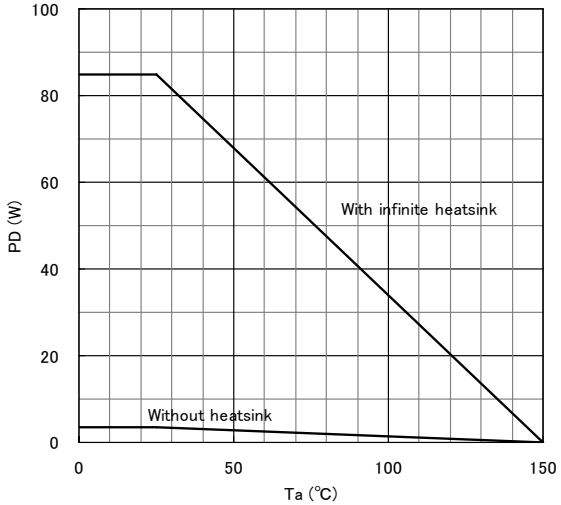

Fig.1 Unclamped Inductive Test Method

$$E_{AS}=\frac{1}{2}\cdot L\cdot I_{LP}^{2}\cdot\frac{V_{(BR)DSS}}{V_{(BR)DSS}-V_{DD}}$$

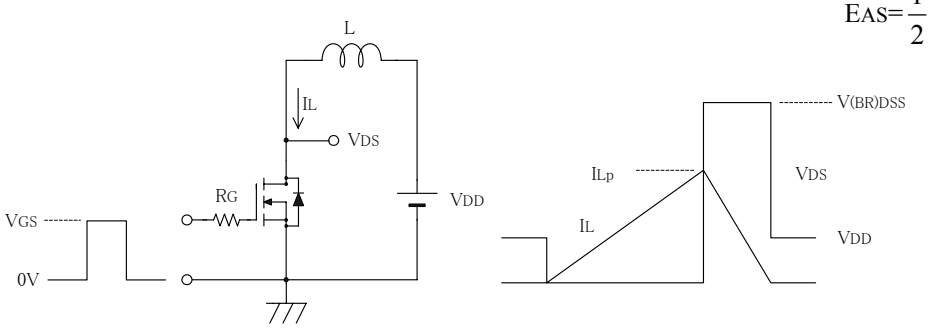

(a) Test Circuit (b) Waveforms

Fig.2 Switching Time Test Method

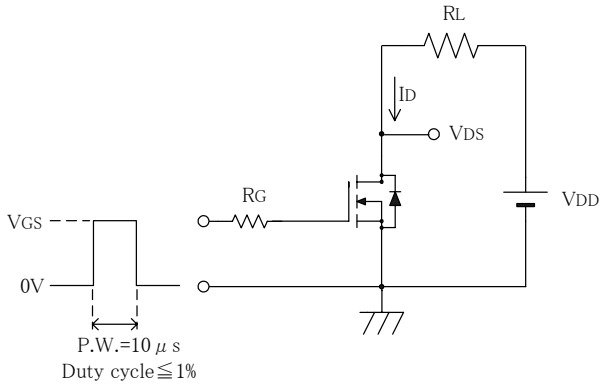

VDD≈125
ID=25
RL=5Ω
VGS=10V
RG=5Ω

(a) Test Circuit

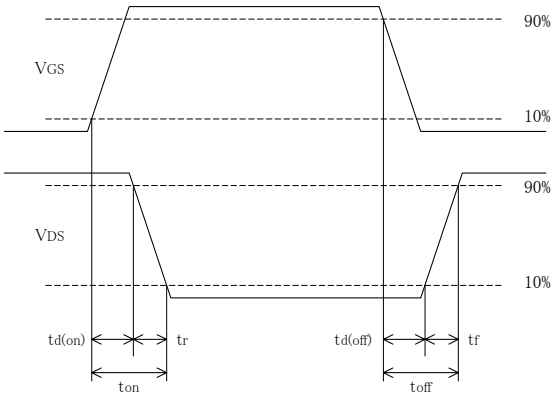

(b) Waveforms

External dimensions

FM100 (TO-3P Full Mold)

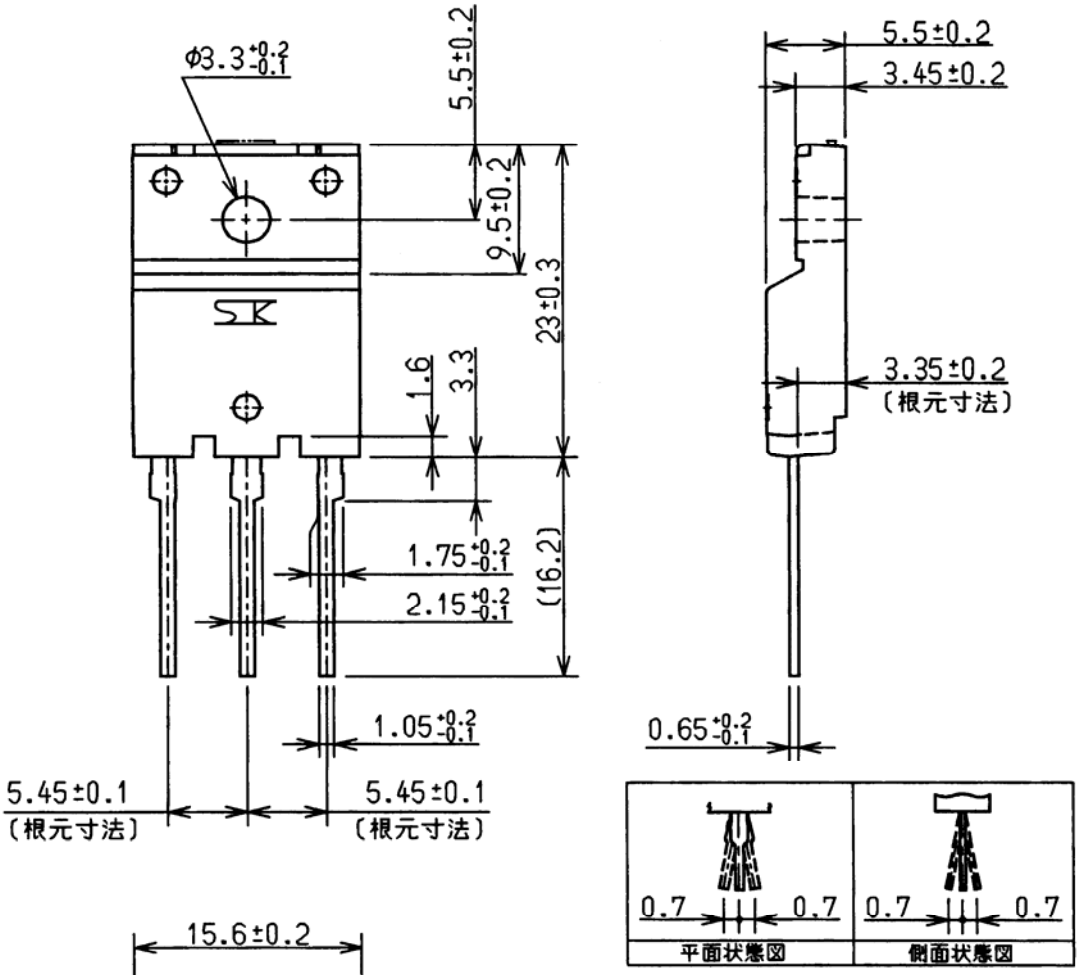

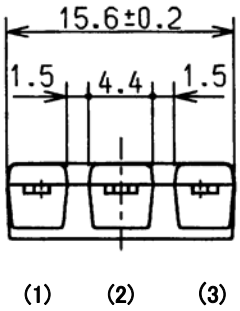

(1) Gate
(2) Drain
(3) Source

Weight Approx. 6.5g

<Worldwide Contacts>

Asia Pacific

China

Sanken Electric Hong Kong Co., Ltd.
Suite 1026 Ocean Centre, Canton Road, Tsimshatsui, Kowloon, Hong Kong
Tel: 852-2735-5262
Fax: 852-2735-5494

Sanken Electric (Shanghai) Co., Ltd.
Room3202, Maxdo Centre, Xingyi Road 8, Changning district, Shanghai, China
Tel: 86-21-5208-1177
Fax: 86-21-5208-1757

Taiwan Sanken Electric Co., Ltd.
Room 1801, 18th Floor, 88 Jung Shiau East Road, Sec. 2, Taipei 100, Taiwan R.O.C.
Tel: 886-2-2356-8161
Fax: 886-2-2356-8261

India

Saket Devices Pvt. Ltd.
Office No.13, First Floor, Bandal - Dhankude Plaza, Near PMT Depot, Paud Road, Kothrud, Pune - 411 038, India
Tel: 91-20-5621-2340
91-20-2528-5449
Fax: 91-20-2528-5459

Japan

Sanken Electric Co., Ltd. Overseas Sales Headquaters
Metropolitan Plaza Bldg. 1-11-1 Nishi-Ikebukuro, Toshima-ku, Tokyo 171-0021, Japan
Tel: 81-3-3986-6164
Fax: 81-3-3986-8637

Korea

Sanken Electric Korea Co., Ltd.
Mirae Asset Life Bldg. 6F, 168 Kongduk-dong, Mapo-ku, Seoul, 121-705, Korea
Tel: 82-2-714-3700
Fax: 82-2-3272-2145

Singapore

Sanken Electric Singapore Pte. Ltd.
150 Beach Road, #14-03 The Gateway West, Singapore 189720
Tel: 65-6291-4755
Fax: 65-6297-1744

Europe

United Kingdom

Sanken Power Systems (UK) Limited
Pencoed Technology Park, Pencoed, Bridgend CF35 5HY. UK
Tel: 44-1656-869-100
Fax: 44-1656-869-162

North America

United States

Allegro MicroSystems, Inc.
115 Northeast Cutoff, Worcester, Massachusetts 01606, U.S.A.
Tel: 1-508-853-5000
Fax: 1-508-853-3353

Allegro MicroSystems, Inc. (Southern California)
14 Hughes Street, Suite B105, Irvine, CA 92618
Tel: 1-949-460-2003
Fax: 1-949-460-7837

CAUTION / WARNING

●The information in this publication has been carefully checked and is believed to be accurate; however, no responsibility is assumed for inaccuracies.

● Sanken reserves the right to make changes without further notice to any products herein in the interest of improvements in the performance, reliability, or manufacturability of its products.
Before placing an order, Sanken advises its customers to obtain the latest version of the relevant information to verify that the information being relied upon is current.

● Application and operation examples described in this catalog are quoted for the sole purpose of reference for the use of the products herein and Sanken can assume no responsibility for any infringement of industrial property rights, intellectual property rights or any other rights of Sanken or any third party which may result from its use.

● When using the products herein, the applicability and suitability of such products for the intended purpose or object shall be reviewed at the users' responsibility.

● Although Sanken undertakes to enhance the quality and reliability of its products, the occurrence of failure and defect of semiconductor products at a certain rate is inevitable. Users of Sanken products are requested to take, at their own risk, preventative measures including safety design of the equipment or systems against any possible injury, death, fires or damages to the society due to device failure or malfunction.

● Sanken products listed in this catalog are designed and intended for the use as components in general purpose electronic equipment or apparatus (home appliances, office equipment, telecommunication equipment, measuring equipment, etc.). Before placing an order, the user's written consent to the specifications is requested.
When considering the use of Sanken products in the applications where higher reliability is required (transportation equipment and its control systems, traffic signal control systems or equipment, fire/crime alarm systems, various safety devices, etc.), please contact your nearest Sanken sales representative to discuss and obtain written confirmation of your specifications. The use of Sanken products without the written consent of Sanken in the applications where extremely high reliability is required (aerospace equipment, nuclear power control systems, life support systems, etc.) is strictly prohibited.

● Anti radioactive ray design is not considered for the products listed herein.

● This publication shall not be reproduced in whole or in part without prior written approval from Sanken.

●This is notification that you, as purchaser of the products/technology, are not allowed to perform any of the following:
1. Resell or retransfer these products/technology to any party intending to disturb international peace and security.
2. Use these products/technology yourself for activities disturbing international peace and security.
3. Allow any other party to use these products/technology for activities disturbing international peace and security.

Also, as purchaser of these products/technology, you agree to follow the procedures for the export or transfer of these products/technology, under the Foreign Exchange and Foreign Trade Law, when you export or transfer the products/technology abroad.