THIS DRAWING IS UNPUBLISHED. RELEASED FOR PUBLICATION -,- .
© COPYRIGHT - By - ALL RIGHTS RESERVED.

LOC	DIST
HG	—

REVISIONS

P	LTR	DESCRIPTION	DATE	DWN	APVD
	A	ECR-15-018476	23DEC15	SW	RZ

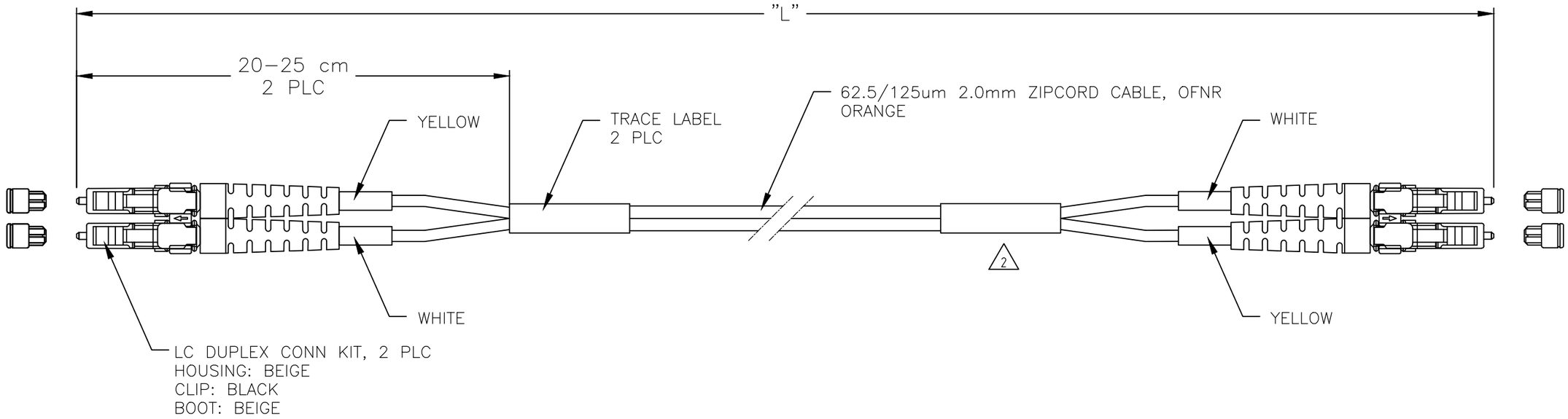

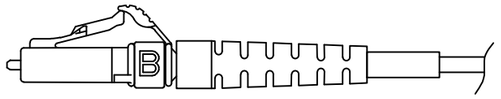

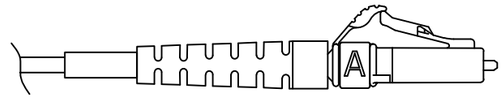

NOTES:

1 INSERTION LOSS ≤ 0.3 dB, MEASURED AT 1300 nm

2 SECOND TRACE LABEL WILL NOT BE PRESENT ON ANY CABLE ASSEMBLY THAT IS LESS THAN 1 METER IN LENGTH.

FIBER PATH

YELLOW (A) ⟷ WHITE (B)

WHITE (B) ⟷ YELLOW (A)

PART NUMBER	"L" (METER)	
X-2064865-Y	XY,0	* THE TOLERANCES OF STANDARD LENGTH REFER TO CUSTOMER DRAWING 1206850
2064865-3	3.0	

THIS DRAWING IS A CONTROLLED DOCUMENT.

DIMENSIONS: METERS

TOLERANCES UNLESS OTHERWISE SPECIFIED:
0 PLC ± -
1 PLC ± -
2 PLC ± -
3 PLC ± -
4 PLC ± -
ANGLES ± -

MATERIAL -

FINISH -

DWN SIMON WU 11APR12
CHK PHILIP LIU 11APR12
APVD RICHARD ZHAO 11APR12
PRODUCT SPEC —
APPLICATION SPEC —
WEIGHT —

TE Connectivity

NAME FOMM62.5 LEAD 2.0TZ LC/DPX - LC/DPX, OFNR

SIZE	CAGE CODE	DRAWING NO	RESTRICTED TO
A3	00779	C-2064865	—

CUSTOMER DRAWING

SCALE	SHEET	REV
NTS	1 OF 1	A