THIS DRAWING IS UNPUBLISHED. RELEASED FOR PUBLICATION -,- .
© COPYRIGHT - BY TYCO ELECTRONICS CORPORATION. ALL INTERNATIONAL RIGHTS RESERVED.

LOC	DIST
G	14

REVISIONS

P	LTR	DESCRIPTION	DATE	DWN	APVD
	D	REVISED PER ECR-09-027352	17FEB10	JR	TM

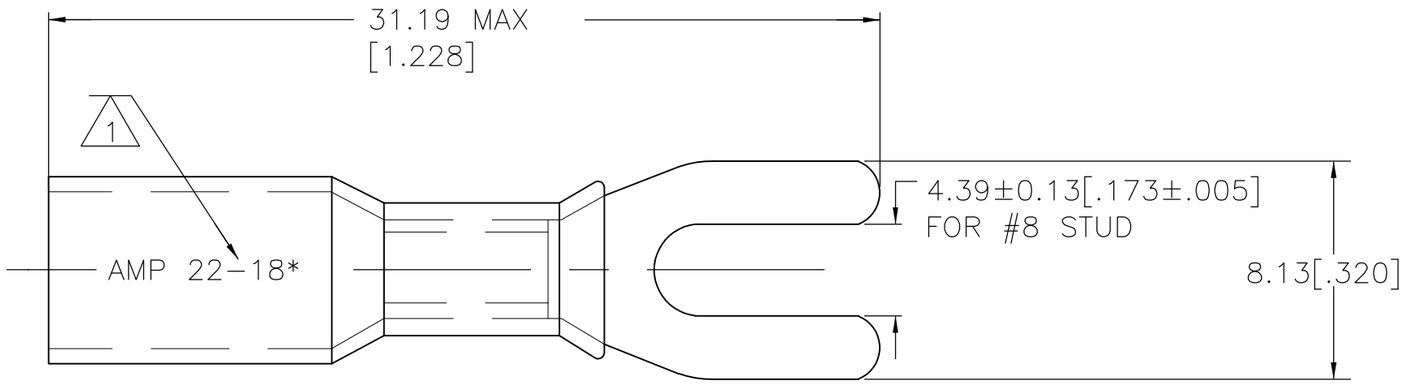

1. STAMP AMP 22-18* APPROX AS SHOWN
2. WIRE INSULATION DIA 4.32[.170] MAX
3. TONGUE MATERIAL THK 0.76±0.05 [.030±.002]

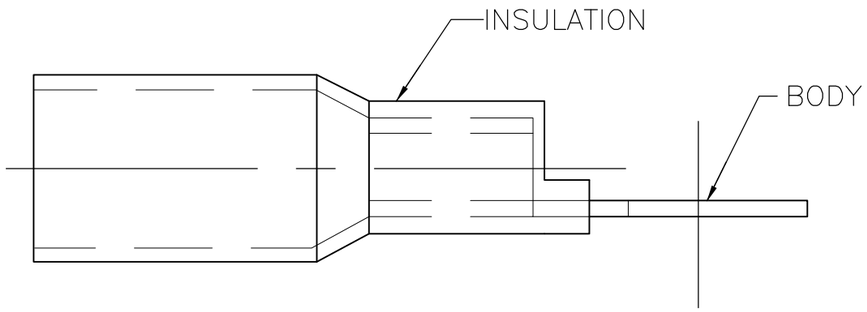

AMP
WIRE RANGE

22-18 AWG
STRANDED

QTY	PACKAGE TYPE	PART NO
50	LOOSE PIECE	8-55867-2
1000	LOOSE PIECE	55867-1

AMP INCORPORATED
CUSTOMER SERVICE SYSTEMS

FOR ADDITIONAL PRODUCT INFORMATION OR COPIES OF DRAWINGS AND TECHNICAL DOCUMENTS	PRODUCT INFORMATION CENTER 1-800-522-6752
FOR APPLICATION TOOLING INFORMATION	TOOLING ASSISTANCE CENTER 1-800-722-1111
FOR ORDER ENTRY	1-800-526-5142

THIS DRAWING IS A CONTROLLED DOCUMENT FOR AMP INCORPORATED. IT IS SUBJECT TO CHANGE AND THE CONTROLLING ENGINEERING ORGANIZATION SHOULD BE CONTACTED FOR THE LATEST REVISION.

MAX RECOMMENDED OPERATING TEMPERATURE: 125° C MAX

VOLTAGE RATING: 600 V MAX

CIRCULAR MIL AREA: 0.26-0.96mm² [509-1900] STRANDED

THIS DRAWING IS A CONTROLLED DOCUMENT.

DIMENSIONS: mm [INCHES]

TOLERANCES UNLESS OTHERWISE SPECIFIED:

0 PLC	± -
1 PLC	± -
2 PLC	± 0.20[.008]
3 PLC	± -
4 PLC	± -
ANGLES	± -

MATERIAL: BODY: ETP COPPER; INSULATION: POLYOLEFIN; COLOR: RED

FINISH: EDP TIN PLATED

DWN	S S GOULDEN	6/93
CHK	R HERSEY	6/93
APVD	B BARE	6/93
PRODUCT SPEC	—	
APPLICATION SPEC	408-4022	
WEIGHT	—	

CUSTOMER DRAWING

Tyco Electronics
Tyco Electronics Corporation
Harrisburg, PA 17105-3608

NAME: TERMINAL, SPADE TONGUE, SEALABLE HEAT SHRINKABLE —

SIZE	CAGE CODE	DRAWING NO	RESTRICTED TO
A3	00779	C-55867	—

SCALE	SHEET	REV
NTS	1 OF 1	D

1470-19 (1/08)