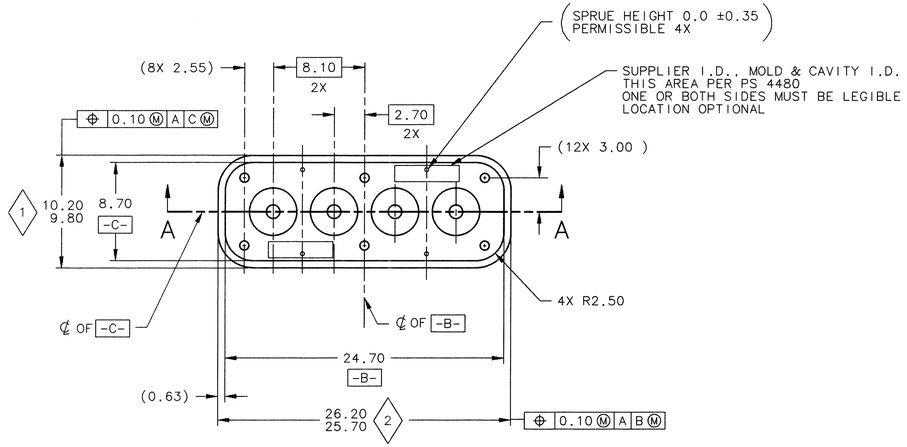

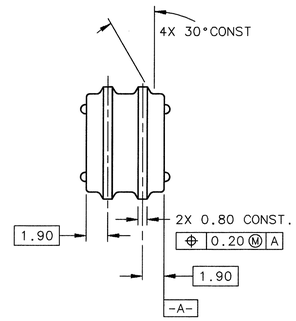

ACTUAL SIZE VIEWS

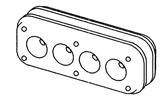

ISOMETRIC VIEW FOR REFERENCE ONLY

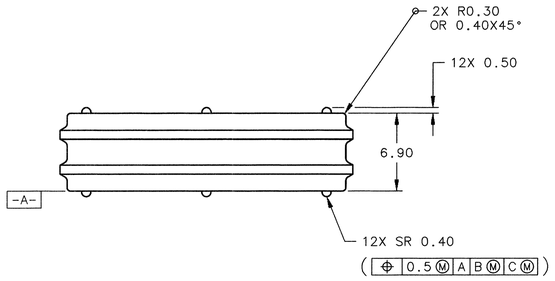

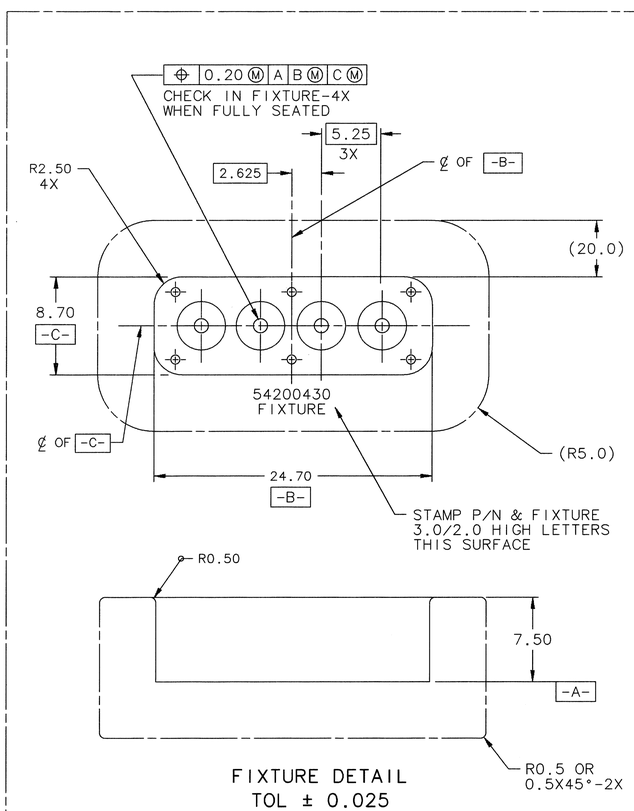

FIXTURE DETAIL
TOL ± 0.025
REFERENCE

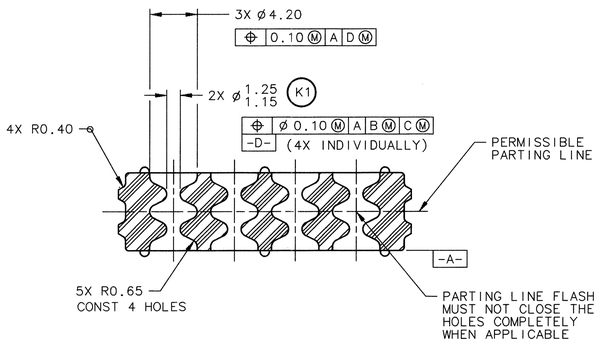

SECTION A-A

NOTES: UNLESS OTHERWISE SPECIFIED

FLASH EXTENSION OF 0.025 THICK X 1.0 WIDE IS THE MAXIMUM PERMISSIBLE AND MUST NOT AFFECT FUNCTION OR FIT OF PART.

2 ◇ SPC DATA REQUIRED

(K) INDICATES IN-PROCESS INSPECTION DIMENSION OR SPECIFICATION :5

MATERIAL: FLUOROSILICONE SAE J2000 M2FK 606 EF31, Z1 THRU Z9.

(K2) COLOR: GREEN

Z1 DUROMETER D2240 25 ±5

Z2 TENSILE D412 1000 PSI MIN.

Z3 ELONGATION D412 300% MIN.

Z4 TEAR D624 90 LBS./IN. MIN.

Z5 COMPRESSION SET D395 22 HRS AT 175°C 30% MAX.

Z6 FLUID RESISTANCE FUEL C
70 HRS AT ROOM TEMP
HARDNESS CHANGE, PTS -20 MAX.
TENSILE CHANGE, PSI -55 MAX.
ELONGATION CHANGE, % -50 MAX.
VOLUME CHANGE, % +25 MAX

Z7 FLUID RESISTANCE FUEL C/ETHANOL 90/10
70 HRS AT ROOM TEMP.
HARDNESS CHANGE, PTS -20 MAX.
TENSILE CHANGE, PSI -70 MAX.
ELONGATION CHANGE, % -50 MAX.
VOLUME CHANGE, % +30 MAX.

Z8 FLUID RESISTANCE FUEL C/METHANOL/ISOBUTANOL 80/18/2
70 HRS AT ROOM TEMP.
HARDNESS CHANGE, PTS -20 MAX.
TENSILE CHANGE, PSI -70 MAX.
ELONGATION CHANGE, % -55 MAX.
VOLUME CHANGE, % +30 MAX

Z9 FLUID RESISTANCE HIGH CETANE DIESEL FUEL (PER MS-9448)
70 HRS AT ROOM TEMP.
HARDNESS CHANGE, PTS -20 MAX.
TENSILE CHANGE, PSI -70 MAX.
ELONGATION CHANGE, % -55 MAX.
VOLUME CHANGE, % +30 MAX

CHANGE IN DESIGN, COMPOSITION, LOCATION, OR PROCESSING FROM THE PART PREVIOUSLY APPROVED FOR PRODUCTION REQUIRES PRIOR APPROVAL BY WALBRO CORPORATION.

(K3) POST LUBE WITH CASTOR OIL OR MINERAL OIL 25 GRAMS PER 1000 PARTS. LUBE MUST BE MIXED THOROUGHLY TO WET ALL EXTERNAL SURFACES OF THE END SEAL.

WIRE APPLICATIONS:

(K4) MUST BE USED WITH 12,14,16,18 OR 20 GAGE TEFLON INSULATION WIRES FOR FLEX OR DIESEL FUEL VEHICLES (INSULATION ø3.35 MAX TO ø1.70 MIN)

(K5) TERMINATED WIRES MUST BE ASSEMBLED INTO SEAL PRIOR TO ASSEMBLY INTO THE INSULATOR.

54200430
PART NUMBER

DRAWING NO. C17006 REVISION D

ZONE	ECN	LET	REVISION RECORD	DATE	DWN	CHK	REL
B1	1426	D	ADDED DIESEL FUEL TO NOTES DELETED NOTE (FFV)	10-1-98	TLA	SSS	SSS
D3			CHECK IN FIXTURE -4X WAS CHECK IN FIXTURE 3X				
C1			ADDED Z9 TO NOTES				
D3			BASIC 1.90 WAS 1.90 2 PLACES				
E4			(12X 3.00) WAS 12X 3.00				
F4			(8X 2.55) WAS 8X 2.55				
E1			ADDED FEATURE CONTROL, -D- & (INDIVIDUALLY 4X) TO DIM ø1.25/1.15				
E2 C3			DELETED INDIVIDUALLY 4X (K) IN-PROCESS WAS △ CRITICAL				
E2			ø 0.10 A D WAS 0.10 A (0.5 A B C) WAS 0.5 A B C				
E4	1108	C	SPRUE HEIGHT NOTE ADDED	4-21-97	DET	SSS	SSS
B1			P/N 54200430 ASSIGNED				
C1			CASTOR OIL OR MINERAL OIL WAS SILICONE PHENYL FLUID				
F3	1103	B	(.063) WAS (.065)	4-9-97	DET	SSS	SSS
F3			26.20/25.70 WAS 26.20/25.80				
B2			DUROMETER 25 ±5 WAS INCORRECTLY SPECIFIED AS 30 ±5				
–	1065	A	RELEASED FOR TOOLING	2-6-97	DET	SSS	SSS

LAST INSP CODE –
LAST TOOL CODE –
LAST SEC A
LAST DATUM C

FCI
FRAMATOME CONNECTORS INTERNATIONAL
Automotive Group

THIS DRAWING, DESIGN AND ALL OTHER INFORMATION INFORMATION CONTAINED THEREON IS PROPRIETARY AND THE PROPERTY OF FRAMATOME CONNECTORS INTERLOCK, INC., AND MAY NOT BE COPIED, REPRODUCED OR DISCLOSED TO ANY THIRD PARTY WITHOUT THE EXPRESSED WRITTEN PERMISSION OF FRAMATOME CONNECTORS INTERLOCK, INC.

THIRD ANGLE PROJECTION

Framatome Connectors Interlock, Inc.
1770 Marie Street Westland, Michigan 48185-3233

UNLESS OTHERWISE SPECIFIED
DIMENSIONS IN MM
1 PLACE DIM ± 0.25
2 PLACE DIM ± 0.10
ANGULAR DIM ± 2°

DRAWN: MARK BURNS DATE: 10-1-96
CHECK: SUCHA SIAN DATE: 10-1-96
ENGR.: SUCHA SIAN DATE: 10-1-96
APPR: DATE:

DO NOT SCALE DRAWING
SCALE: 4X & NOTED

MATERIAL: SEE NOTES

REFERENCE: WALBRO P/N 35004

THIS IS A COMPUTER AIDED DESIGN DRAWING
CAD ID. NO.: C17006

NAME:
END-SEAL (FLUOROSILICONE)
4-WAY FEMALE INS.
(2.80MM IN-LINE APEX CONN. SYS.)

DRAWING NO. C17006 REV. D

TOOL NO.: PURCH PART