DRG No.	ISSUE	TYPE No.		DIM. IN:	ODC:QA:40077 ISSUE 2	THIS DRAWING AND THE COPYRIGHT AND DESIGN RIGHT THEREIN ARE THE PROPERTY OF OXLEY DEVELOPMENTS CO. Ltd. AND MUST NOT BE REPRODUCED OR DISCLOSED TO A THIRD PARTY WITHOUT PRIOR WRITTEN CONSENT OF THE COMPANY.
CP12924	8	DLT/– & DLTM/–		MILLIMETRES	DO NOT SCALE	

ISS	MODIFICATION	DATE
4	REDRAWN	24.6.80
5	CHANGE No. 78/80	27.10.80
6	CHANGE No. 87/87	23.11.87
7	CHANGE No. 91/47	19.3.91
8	CHANGE No. 96/50	26.2.96

MATERIALS :
BODY : BRASS TO BS 2874 CZ 121
CAPACITOR : MONOLITHIC MULTILAYER
CONSTRUCTION INCORPORATING
CERAMOX®DIELECTRIC

MOUNTING DETAILS :
HOLE IN CHASSIS : ø5.1
MAXIMUM CHASSIS THICKNESS : 1.6 (16 S.W.G.)
MINIMUM PITCHING : 8mm

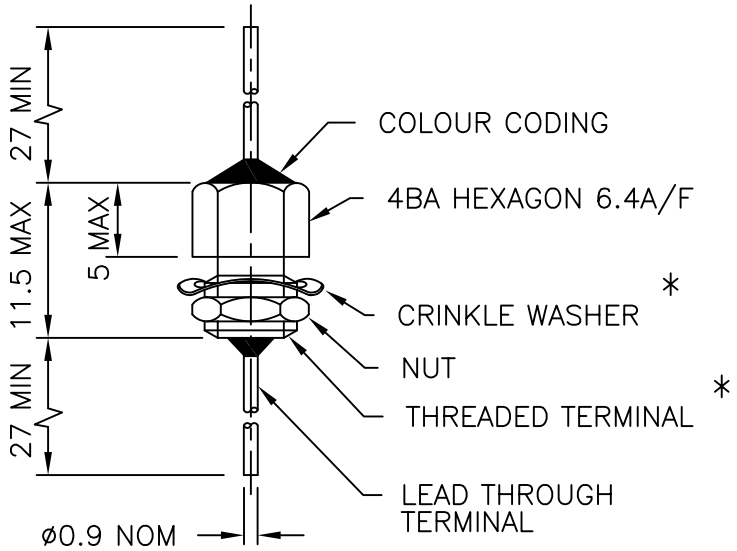

CHARACTERISTICS :
CAPACITANCE TOLERANCE : –20% +80%
PROOF VOLTAGE : 250V d.c.
DISSIPATION FACTOR AT 1 kHz : LESS THAN 0.03
OPERATING TEMPERATURE RANGE : –40°C TO +100°C
VARIATION OF CAPACITANCE WITH TEMPERATURE (MAX) : ±12% (22, 47, 100)
–55% +20% (330, 470, 680, 1000, 2200, 4700, 10000, 47000)
–80% +30% (100000)

PERFORMANCE AS BS 9075 F006

*	DLT	DLTM
THREAD	2BA BeCu CRINKLE WASHER AS STANDARD – 0.3 THICK – PLATING TIN	M5 x 0.8 WITH BeCu CRINKLE WASHER AS STANDARD – 0.3 THICK – PLATING TIN
PLATING	GOLD TO BS4292 Au OR TIN 5µ THICK	TIN 5µ THICK

LEADTHROUGH TERMINATIONS :
SILVER OR TIN–LEAD. SOLDERABILITY
EXCEEDS BS2011 (IEC 68) TEST T

TYPE	CAPACITANCE	COLOUR CODE	RATED VOLTAGE (Vds)	
			–40/85°C	100°C
DLT 22 & DLTM 22	22 pF	BLACK	100	50
DLT 47 & DLTM 47	47 pF	YELLOW	100	50
DLT 100 & DLTM 100	100 pF	WHITE	100	50
DLT 330 & DLTM 330	330 pF	GREEN	100	50
DLT 470 & DLTM 470	470 pF	ORANGE	100	50
DLT 680 & DLTM 680	680 pF	GREY	100	50
DLT 1000 & DLTM 1000	1000 pF	BROWN	100	50
DLT 2200 & DLTM 2200	2200 pF	LIGHT GREEN	100	50
DLT 4700 & DLTM 4700	4700 pF	RED	100	50
DLT 10000 & DLTM 10000	10000 pF	BLUE	100	50
DLT 47000 & DLTM 47000	47000 pF	LIGHT BLUE	100	50
DLT 100000 & DLTM 100000	100000 pF	LIGHT BROWN	50	25

© COPYRIGHT OXLEY DEVELOPMENTS Co. Ltd. 1991

MATERIAL	DRAWN
AS STATED	T. DAVIS
FINISH	CHECKED
———	Simon Russam
PLATING	APPROVED
AS STATED	91/47
TOLERANCE	DATE
———	24.6.80
REMARKS	
TITLE	ULTRA – LOW INDUCTANCE CAPACITOR

OXLEY
Tel.0229 52621
Fax.0229 55090
Telex.65141
OXLEY DEVELOPMENTS COMPANY LTD.
Ulverston
Cumbria LA12 9QG
ENGLAND

SCALE	TYPE No.	DRG No.	ISSUE
2 : 1	DLT/– & DLTM/–	CP12924	8