THIS DRAWING IS UNPUBLISHED. RELEASED FOR PUBLICATION ,19 .
© COPYRIGHT 19 BY AMP INCORPORATED. ALL RIGHTS RESERVED.

LOC	DIST
GP	00

REVISIONS

P	LTR	DESCRIPTION	DATE	DWN	APVD
	E	REVISED PER EC 0S11-0216-03	10SEP04	JG	JG
	E1	REVISED PER ECO-09-021826	08JAN10	KK	AEG

1. THIS KIT SHIPPED NOT ASSEMBLED.

2. MATERIAL: COVERS– POLYPHENYLENE OXIDE, SEE TABLE FOR COLOR.
STRAIN RELIEF – POLYPROPYLENE, BLACK.

3. CABLE DIAMETER LESS THAN 12.7 [.500] SHALL USE 16.26 [.64] STRAIN RELIEF. CABLE DIAMETER GREATER THAN 12.7 [.500] SHALL USE 18.54 [.73] STRAIN RELIEF.

4. PACKAGED 1 KIT PER POLYBAG.

5. BULK PACKAGED 500 KITS PER CONTAINER.

6. OBSOLETE PARTS: OBSOLETE CIS STREAMLINING PER D.RENAUD/D.SINISI

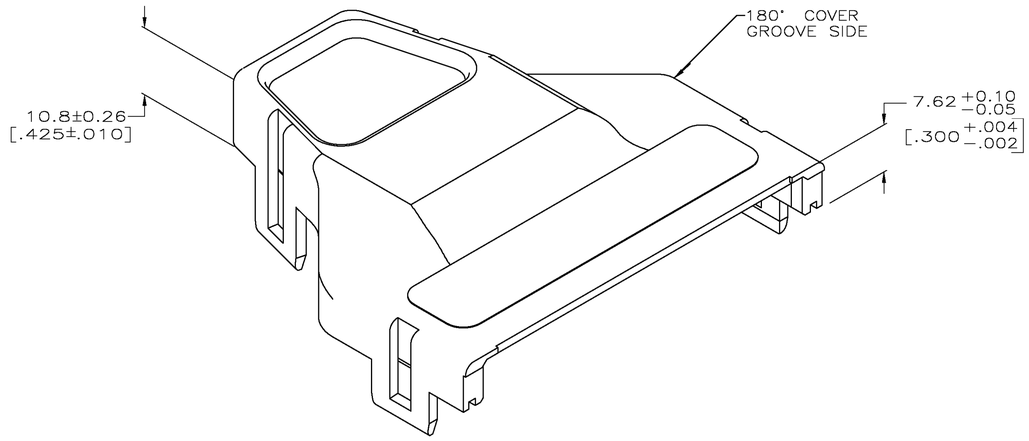

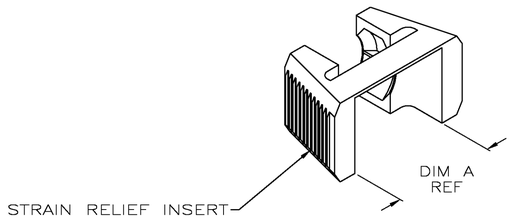

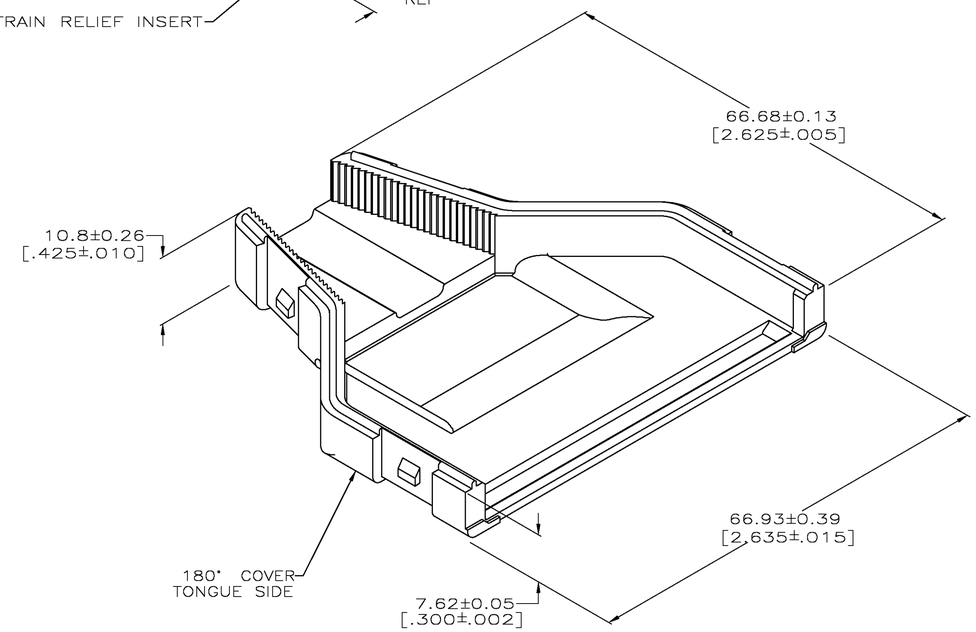

	COLOR	PACKAGED	DIM. A (3)	CABLE RANGE DIA	PART NUMBER
(6) OBSOLETE	COMPAQ–GRAY	(5)	18.67 [.735]	8.89–15.88 [.350–.625]	~~5–554946–3~~
	BLACK	(5)	16.13 [.635]	6.35–12.7 [.250–.500]	5–554946–1
	BLACK	(4)	18.67 [.735]	8.89–15.88 [.350–.625]	554946–2
	BLACK	(4)	16.13 [.635]	6.35–12.7 [.250–.500]	554946–1

THIS DRAWING IS A CONTROLLED DOCUMENT FOR AMP INCORPORATED. UNAUTHORIZED CHANGES AND REPRODUCTIONS ARE PROHIBITED. ORGANIZATION SHOULD BE CONTACTED FOR THE LATEST REVISION.

DIMENSIONS: mm [INCHES]

TOLERANCES UNLESS OTHERWISE SPECIFIED:
0 PLC ±–
1 PLC ±–
2 PLC ±–
3 PLC ±–
4 PLC ±–
ANGLES ±–

MATERIAL (2)
FINISH –

DWN L. SMITH 3–15–95
CHK D.HUSSEY 4–04–95
APVD M. HUGHES 4–04–95

PRODUCT SPEC –
APPLICATION SPEC –
WEIGHT –

AMP Incorporated
Harrisburg, PA 17105–3608

NAME COVER KIT, 180 DEGREE, 50 POSITION, SHIELDED, CHAMP®

SIZE A1 | CAGE CODE 00779 | DRAWING NO C-554946

CUSTOMER DRAWING | SCALE 2:1 | SHEET 1 OF 1 | REV E1