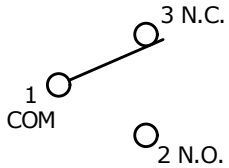

SWITCH
SCHEMATIC
(MOMENTARY)

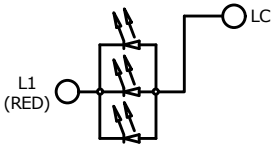

CIRCUIT LAYOUT

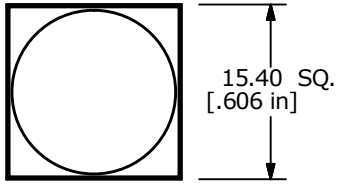

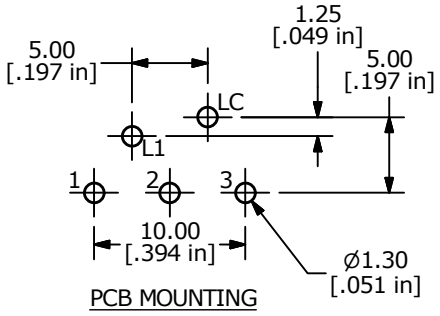

PCB MOUNTING

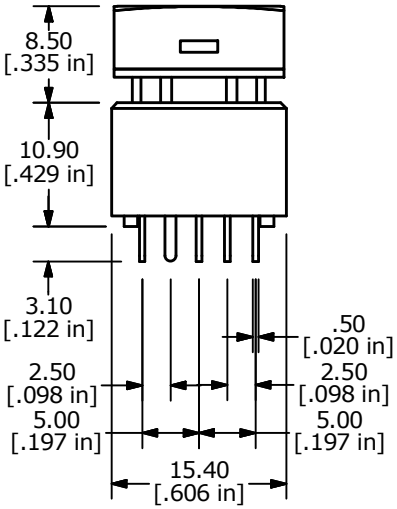

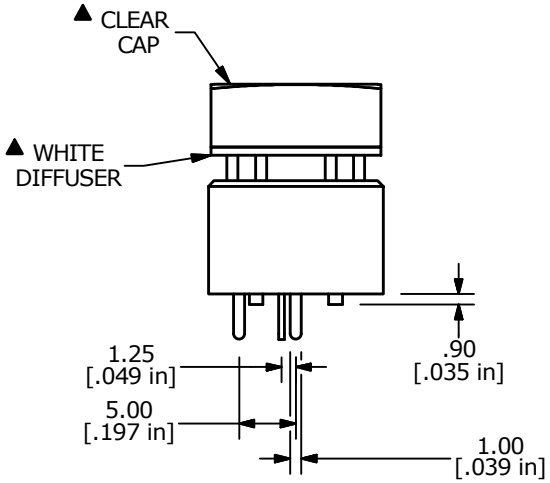

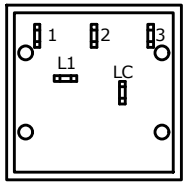

NOTES:
1. ALL DIMENSIONS IN MM
2. GENERAL TOLERANCE: X.X=±0.4
   X.XX=±0.25
3. TERM. NOS. FOR REFERENCE ONLY.
▲ 4. CONTACT RATING: 0.1A MAX. @ 28VDC
5. CONTACT MATERIAL: GOLD
6. ELECTRICAL LIFE: 200,000 Typical
7. OPERATIONAL LIFE: 200,000 CYCLES TYP.
8. OPERATING TEMP: -40°C TO +85°C
9. OPERATING FORCE: 200 ± 100 gf
10. CONTACT RESISTANCE:
    100 MILLI-OHM INITIAL TYP. MAX.
11. DIELECTRIC STRENGTH:
    1000 VAC FOR 1 MINUTE
12. TRAVEL TO MAKE: 2.20mm ± 0.2
13. 2011/65/EU (ROHS) COMPLIANT
14. ▲DENOTES CRITICAL PARAMETER
▲ 15. LED COLOR: RED: 3 CHIPS; 1.95VDC, @20mA TYP.

REV	PCR NO	DESCRIPTION	DATE	BY
C	22342	UPDATED CONTACT RATING	9/12/16	MJR
B	19708	UPDATE DRAWING	02/25/11	BMA
A	18519	RELEASE FOR PRODUCTION	05/18/09	BLR

THE INFORMATION CONTAINED IN THIS DOCUMENT IS PROPRIETARY TO E-SWITCH AND IS NOT TO BE COPIED OR TRANSFERRED

E-SWITCH®

TITLE ULP12OAP1RSSCL1REDNIL

SCALE	DATE	DR	DWG	REV
3:2	5/18/2009	BLR	B800025	C