Cellergy

Super Capacitors To Improve Power Performance.

Low ESR
High Capacitance
Wide Range of Operating Temperatures
Wide Packaging Capability
Wide Footprint Selection
High Power
Safe
Environmentally Friendly RoHS Compliant

Revision: 13-02-13
Subject to change without notice

Table of Contents

	Page
Part1: Data Sheet	3
Revision History	3
Ordering Information	4
Product Schematic	4
Line Card	5,6,7,8
Electrical Rating Table	9
Mechanical Dimensions	10,11,12,13
Cell Structure	14
Packing	15,16,17
Qualification Test Summary	18
Measuring Method of Characteristics	19
Typical Capacitor Characteristics	20
Part2: User Manual	21
Background	21
Electrochemical Capacitors	22
Cellergy's Technology	23
Application Notes	24
Voltage Drop	25
EDLC and Battery Coupling	26
Distinct Applications for Cellergy Super Capacitors	28
Manual Soldering	29
Handling Cautions	30

Revision History, last updates

No.	Check	Description of Revision	Date
1	Semion Simma	CLG01P060L17 changed to CLG01P015L17. CLG01P120L17 changed to CLG01P300L17	25/07/10
2	Semion Simma	Solder ability Test Method was changed	01/09/10
3	Semion Simma	500 hours Load life test for 12x12.5 products	11/01/11
4	Semion Simma	Capacitance measurement methodology	21/02/11
5	Semion Simma	Mechanical dimensions drawings	02/03/11
6	Semion Simma	General spec changes	10/04/11
7	Semion Simma	Number of charge/discharge cycles	07/08/11
8	Semion Simma	CLC, CLK Series are added	31/01/12
9	Semion Simma	CLK Series values are updated	21/03/12
10	Semion Simma	Lead pull strength test replaced by robustness of terminations	24/04/12
11	Semion Simma	Approving extended temperature range up to +85C	31/07/12
12	Semion Simma	The drawings of new trays were added	21/11/12
13	Semion Simma	The height of CL…..48 parts is increased	27/12/12
14	Semion Simma	The height and ESR of :CLC___12 ,CLK___L17, CLK___L28 and CLG___L48 are changed.	13/02/13

Ordering Information

1	2	3	4	5	6
CLG	02	P	080	L	17

1_ Series Name

CLG : Standard
CLC : Low Leakage
CLK : Extra Capacitance

2_ Nominal Voltage:01 (1.4V); 02 (2.1V); 03 (3.5V); 04 (4.2V); 05 (5.5V); 06 (6.3V); 09 (9V); 12 (12V)

3_ Case Types: P - Prismatic

4_ Capacitance: 080 (80 mF)

5_ Leads: L-Through Hole, F-Flat

6_ Case Size: 12 (12X12.5mm), 17(17x17.5 mm), 28(28x17.5mm), 48(48X30.5mm)

Product Schematics (by Case Size)

L12	L17	L28	L48

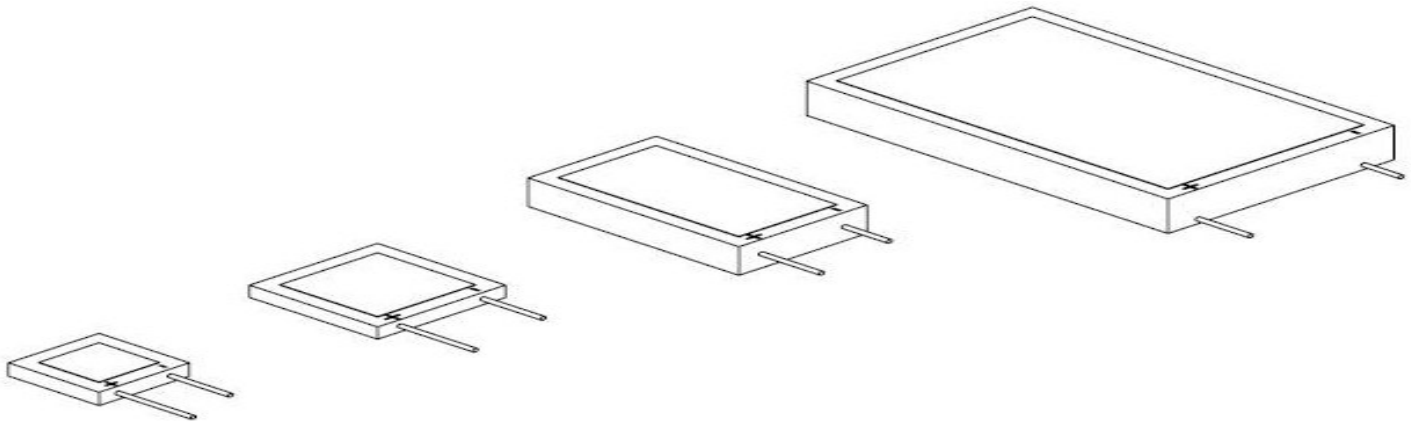

Cellergy

Line Card, 12x12.5 mm

CLG : Standard

	P/N	Nominal Voltage	ESR	Capacitance	Max Allowed LC	Length (L)	Width (W)	Height (H)	Pitch (P)	Weight
		(Volt)	(mΩ)	(mF)	(μA)	(mm)	(mm)	(mm)	(mm)	(gram)
12x12.5 Single	CLG03P012L12 *	3.5	600	12	3	12	12.5	2.4	8.0 **	1.3
	CLG04P010L12	4.2	720	10	3	12	12.5	2.6	8.0	1.4
	CLG05P008L12	5.5	1000	8	3	12	12.5	3.1	8.0	1.5
	CLG06P007L12	6.3	1200	7	3	12	12.5	3.4	8.0	1.6
*** 12x12.5 Double	CLG03P025L12	3.5	300	25	6	12	12.5	3.4	8.0	1.6
	CLG04P020L12	4.2	360	20	6	12	12.5	3.9	8.0	1.7
	CLG05P016L12	5.5	500	16	6	12	12	4.8	8.0	1.8
	CLG06P012L12	6.3	600	12	6	12	12.5	5.3	8.0	1.9

CLC : Low Leakage

	P/N	Nominal Voltage	ESR	Capacitance	Max Allowed LC	Length (L)	Width (W)	Height (H)	Pitch (P)	Weight
		(Volt)	(mΩ)	(mF)	(μA)	(mm)	(mm)	(mm)	(mm)	(gram)
12x12.5 Single	CLC03P012L12 *	3.5	600	12	1.5	12	12.5	2.4	8.0 **	1.3
	CLC04P010L12	4.2	720	10	1.5	12	12.5	2.9	8.0	1.4
*** 12x12.5 Double	CLC03P025L12	3.5	330	25	3	12	12.5	3.7	8.0	1.6
	CLC04P020L12	4.2	390	20	3	12	12.5	4.2	8.0	1.7

Notes: * For capacitors with flat leads, P/N is CLG__P__**F**12 instead of CLG__P__**L**12.
** For capacitors with flat leads, pitch is **7.3** mm instead of **8** mm.
*** "Double"- a supercapacitor built of two parallel connected "Single" cells.

Revision: 13-02-13
Subject to change without notice

Cellergy

Line Card, 17x17.5 mm

CLG : Standard

	P/N	Nominal Voltage	ESR	Capacitance	Max Allowed LC	Length(L)	Width (W)	Height (H)	Pitch (P)	Weight
		(Volt)	(mΩ)	(mF)	(μA)	(mm)	(mm)	(mm)	(mm)	(gram)
17x17.5 Single	CLG02P040L17*	2.1	180	40	6	17	17.5	2.2	11.0	2.6
	CLG03P025L17	3.5	300	25	6	17	17.5	2.4	11.0	2.7
	CLG04P020L17	4.2	360	20	6	17	17.5	2.6	11.0	2.8
	CLG05P015L17	5.5	480	15	6	17	17.5	3.1	11.0	3.0
17x17.5 Double **	CLG02P080L17	2.1	90	80	12	17	17.5	2.5	11.0	3.2
	CLG03P050L17	3.5	150	50	12	17	17.5	3.4	11.0	3.3
	CLG04P040L17	4.2	180	40	12	17	17.5	3.9	11.0	3.4
	CLG05P030L17	5.5	240	30	12	17	17.5	4.8	11.0	3.6

CLK : Extra Capacitance

	P/N	Nominal Voltage	ESR	Capacitance	Max Allowed LC	Length (L)	Width (W)	Height (H)	Pitch (P)	Weight
		(Volt)	(mΩ)	(mF)	(μA)	(mm)	(mm)	(mm)	(mm)	(gram)
17x17.5 Single	CLK03P050L17	3.5	310	50	6	17	17.5	2.9	11.0	2.7
	CLK04P040L17	4.2	370	40	6	17	17.5	3.2	11.0	2.8
	CLK05P030L17	5.5	490	30	6	17	17.5	3.8	11.0	3.0
17x17.5 Double **	CLK03P100L17	3.5	155	100	12	17	17.5	4.5	11.0	3.3
	CLK04P080L17	4.2	185	80	12	17	17.5	5.2	11.0	3.4
	CLK05P060L17	5.5	245	60	12	17	17.5	6.3	11.0	3.6

Notes: * For capacitors with flat leads, P/N is CLG__P__**F**17 instead of CLG__P__**L**17.
** "Double"- a supercapacitor built of two parallel connected "Single" cells.

Revision: 13-02-13
Subject to change without notice

Cellergy

Line Card, 28x17.5 mm

CLG : Standard

	P/N	Nominal Voltage	ESR	Capacitance	Max Allowed LC	Length (L)	Width (W)	Height (H)	Pitch (P)	Weight
		(Volt)	(mΩ)	(mF)	(μA)	(mm)	(mm)	(mm)	(mm)	(gram)
28x17.5 Single	CLG03P060L28*	3.5	130	60	10	28	17.5	2.4	11.0	4.3
	CLG04P050L28	4.2	150	50	10	28	17.5	2.6	11.0	4.5
	CLG05P040L28	5.5	200	40	10	28	17.5	3.1	11.0	4.8
	CLG06P035L28	6.3	230	35	10	28	17.5	3.4	11.0	5.3
	CLG12P015L28	12	445	15	10	28	17.5	5.4	11.0	6.4
28x17.5 Double **	CLG03P120L28	3.5	65	120	20	28	17.5	3.4	11.0	5.3
	CLG04P100L28	4.2	75	100	20	28	17.5	3.9	11.0	5.4
	CLG05P080L28	5.5	100	80	20	28	17.5	4.8	11.0	5.7
	CLG06P070L28	6.3	115	70	20	28	17.5	5.4	11.0	6.3
	CLG12P030L28	12	225	30	20	28	17.5	9.0	11.0	7.1

CLK : Extra Capacitance

	P/N	Nominal Voltage	ESR	Capacitance	Max Allowed LC	Length (L)	Width (W)	Height (H)	Pitch (P)	Weight
		(Volt)	(mΩ)	(mF)	(μA)	(mm)	(mm)	(mm)	(mm)	(gram)
28x17.5 Single	CLK03P120L28*	3.5	170	120	10	28	17.5	3.1	11.0	4.3
	CLK04P100L28	4.2	190	100	10	28	17.5	3.4	11.0	4.5
	CLK05P080L28	5.5	240	80	10	28	17.5	3.8	11.0	4.8
	CLK12P030L28	12	460	30	10	28	17.5	6.8	11.0	7.8
28x17.5 Double **	CLK03P240L28	3.5	85	240	20	28	17.5	4.8	11.0	5.3
	CLK04P200L28	4.2	95	200	20	28	17.5	5.3	11.0	5.4
	CLK05P160L28	5.5	120	160	20	28	17.5	6.5	11.0	5.7
	CLK12P060L28	12	230	60	20	28	17.5	12.0	11.0	8.1

Notes: * For capacitors with flat leads, P/N is CLG__P__F28 instead of CLG__P__L28.
** "Double"- a supercapacitor built of two parallel connected "Single" cells.

Revision: 13-02-13
Subject to change without notice

Cellergy

Line Card, 48x30 mm

CLG : Standard

	P/N	Nominal Voltage	ESR	Capacitance	Max Allowed LC	Length (L)	Width (W)	Height (H)	Pitch (P)	Weight
		(Volt)	(mΩ)	(mF)	(μA)	(mm)	(mm)	(mm)	(mm)	(gram)
48x30	CLG02P700L48*	2.1	18	700	65	48	30.5	3.3	22.3	18.5
	CLG03P420L48	3.5	30	420	65	48	30.5	4.2	22.3	19.5
	CLG04P350L48	4.2	36	350	65	48	30.5	4.7	22.3	20.0
	CLG05P280L48	5.5	48	280	65	48	30.5	5.6	22.3	21.2
	CLG06P245L48	6.3	54	245	65	48	30.5	6.1	22.3	21.7
	CLG09P165L48	9	78	165	65	48	30.5	8.0	22.3	25.2
	CLG12P120L48	12	108	120	65	48	30.5	10.0	22.3	31.1

Notes: * For capacitors with flat leads, P/N is CLG__P__F48 instead of CLG__P__L48.

Electrical Rating Table

CLG Ratings	Nominal	Minimum	Maximum
Capacitance tolerance		-20%	+80%
Operating Temp.	25°C	-40°C	+70°C (all products) +85°C (CLK series)
Storage Temp.	25°C	-10°C	+35°C
Surge voltage			+15%
Pulse current			No limit

Mechanical Dimensions

Through Hole Leads, Single

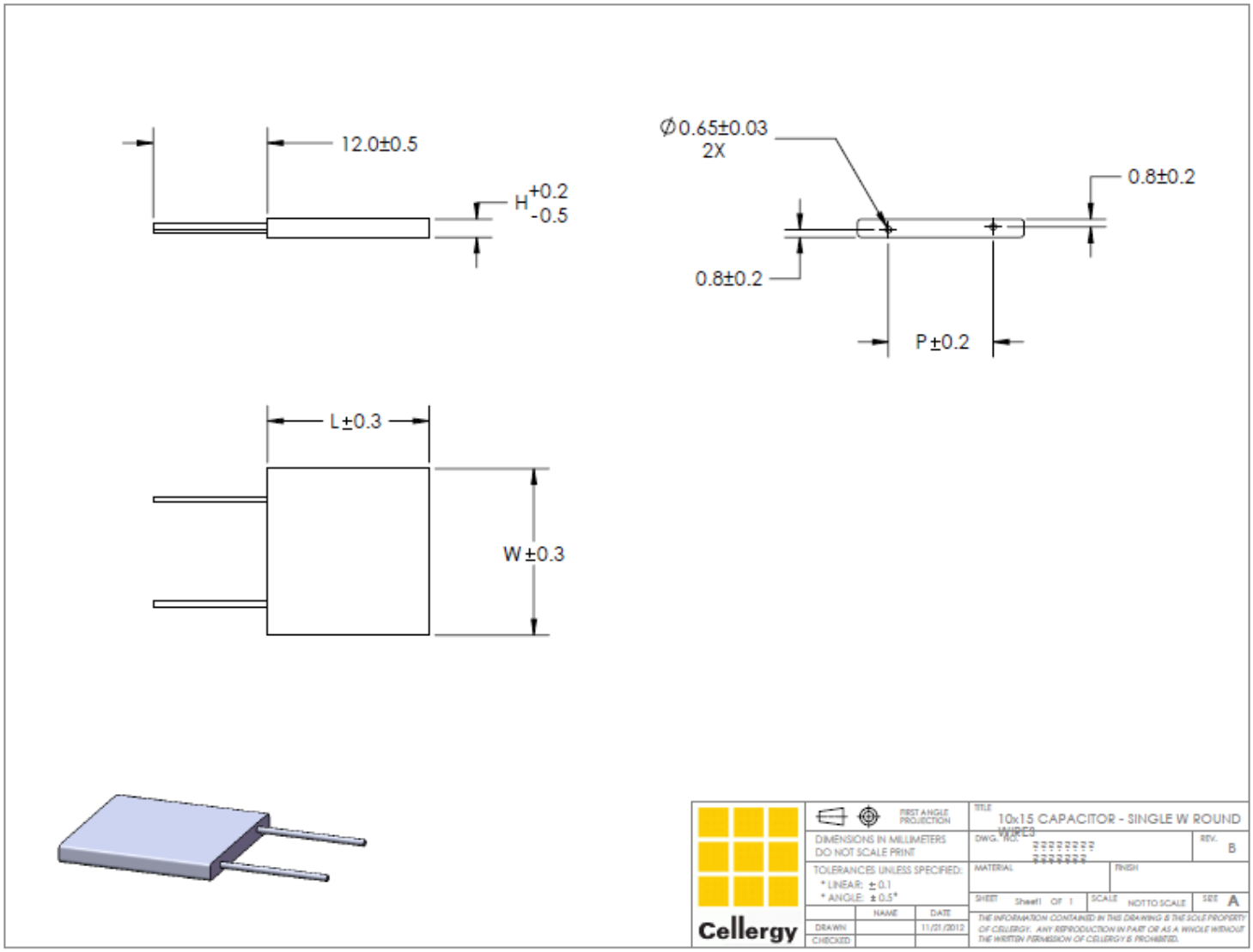

P/N	V [V]	ESR [mΩ]	Cap [mF]	LC [μA]	L [mm]	W [mm]	H [mm]	P [mm]
CLG03P012L12	3.5	600	12	3	12	12.5	2.4	8
CLG04P010L12	4.2	720	10	3	12	12.5	2.6	8
CLG03P025L17	3.5	300	25	6	17	17.5	2.4	11
CLG04P020L17	4.2	360	20	6	17	17.5	2.6	11
CLG03P060L28	3.5	130	60	10	28	17.5	2.4	11
CLG04P050L28	4.2	150	50	10	28	17.5	2.6	11

Mechanical Dimensions

Through Hole Leads, Double

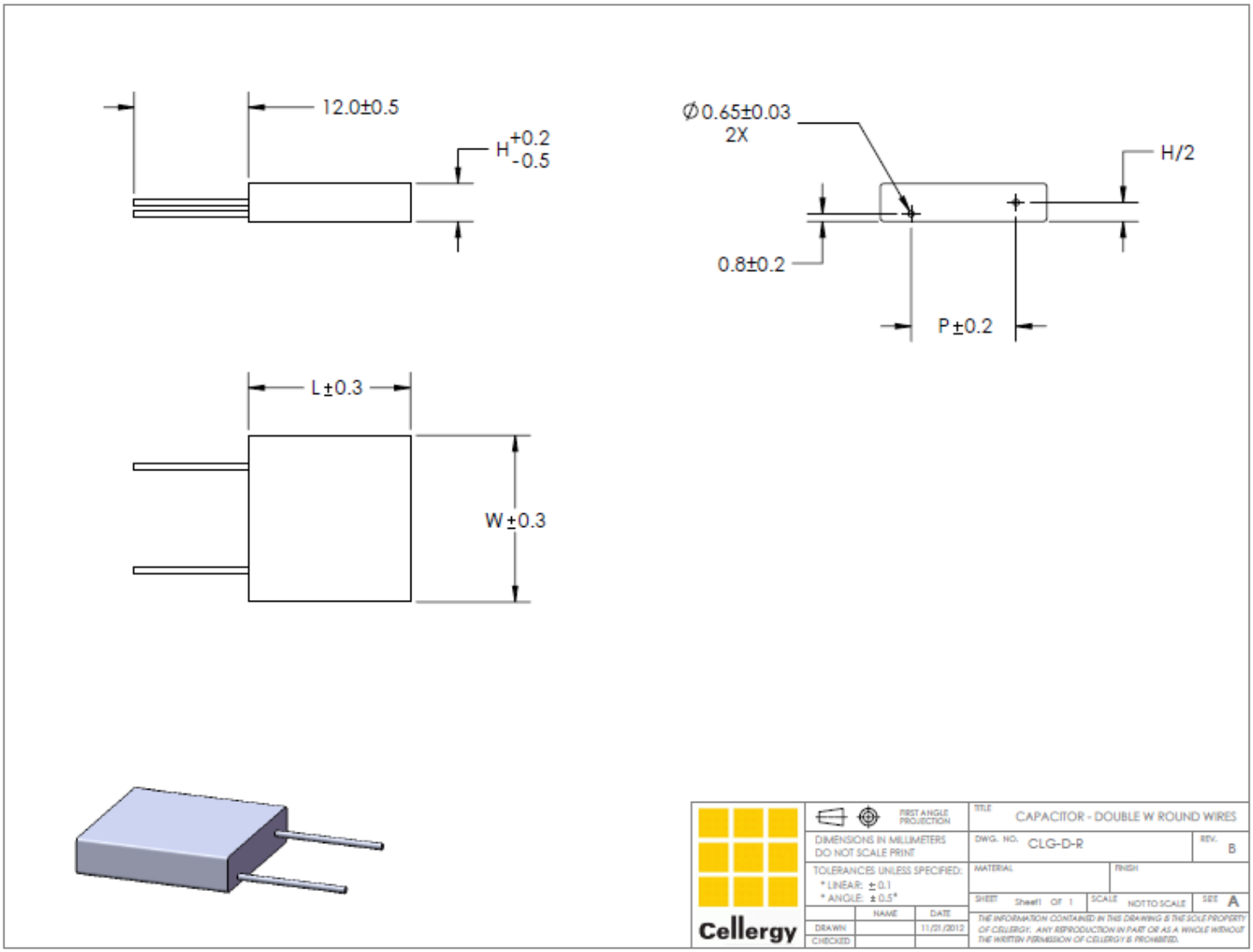

P/N	V [V]	ESR [mΩ]	Cap [mF]	LC [μA]	L [mm]	W [mm]	H [mm]	P [mm]
CLG03P025L12	3.5	300	25	6	12	12.5	3.4	8
CLG04P020L12	4.2	360	20	6	12	12.5	3.9	8
CLG03P050L17	3.5	150	50	12	17	17.5	3.4	11
CLG04P040L17	4.2	180	40	12	17	17.5	3.9	11
CLG03P120L28	3.5	65	120	20	28	17.5	3.4	11
CLG04P100L28	4.2	75	100	20	28	17.5	3.9	11
CLG03P420L48	3.5	20	420	65	48	30.5	3.4	22.3
CLG04P350L48	4.2	25	350	65	48	30.5	3.9	22.3

Mechanical Dimensions

Flat Leads, Single

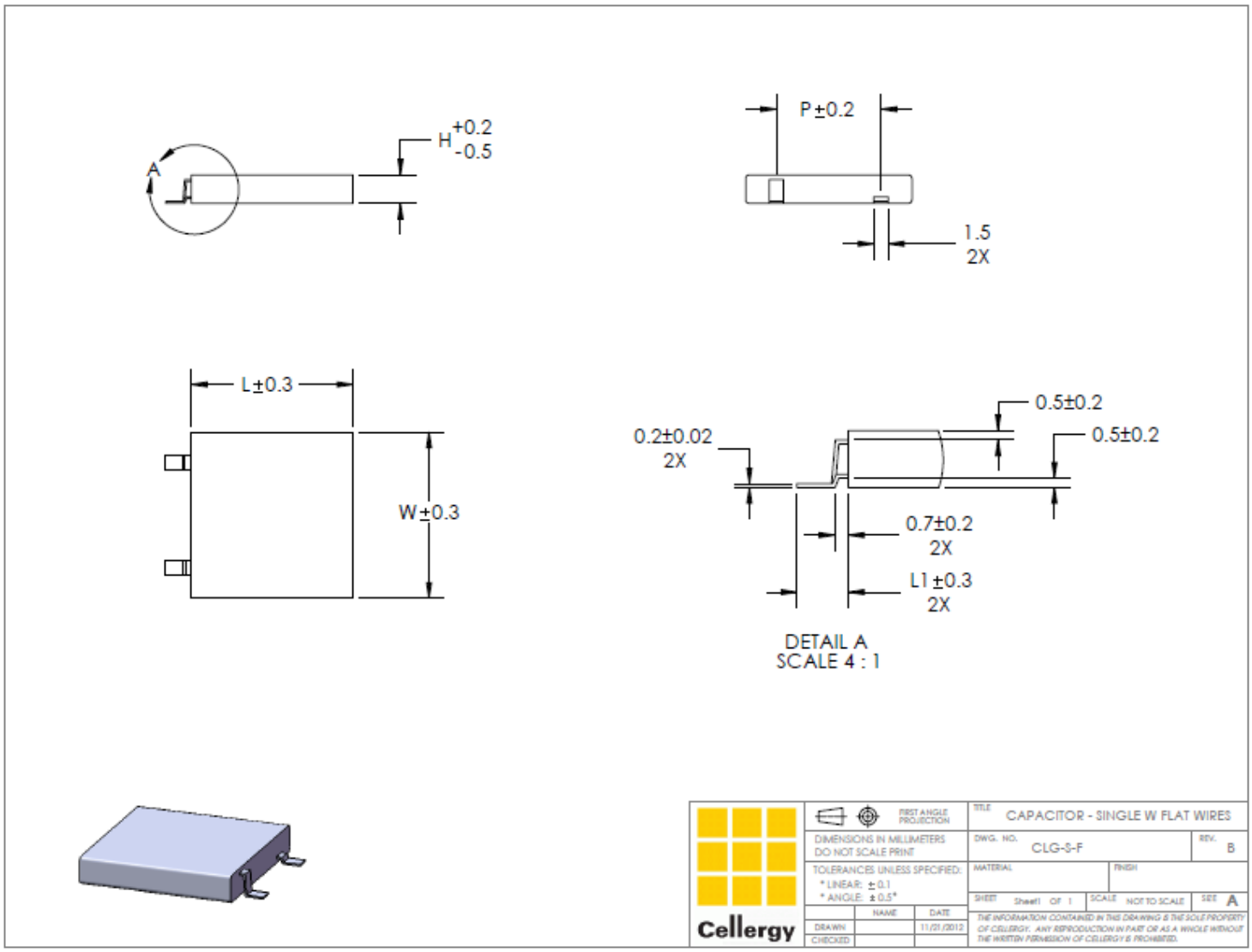

P/N	V [V]	ESR [mΩ]	Cap [mF]	LC [μA]	L [mm]	W [mm]	L1 [mm]	H [mm]	P [mm]
CLG03P012F12	3.5	600	12	3	12	12.5	2.7	2.4	7.3
CLG04P010F12	4.2	720	10	3	12	12.5	2.7	2.6	7.3
CLG03P025F17	3.5	300	25	6	17	17.5	3.7	2.4	11
CLG04P020F17	4.2	360	20	6	17	17.5	3.7	2.6	11
CLG03P060F28	3.5	130	60	10	28	17.5	3.7	2.4	11
CLG04P050F28	4.2	150	50	10	28	17.5	3.7	2.6	11

Mechanical Dimensions

Flat Leads, Double

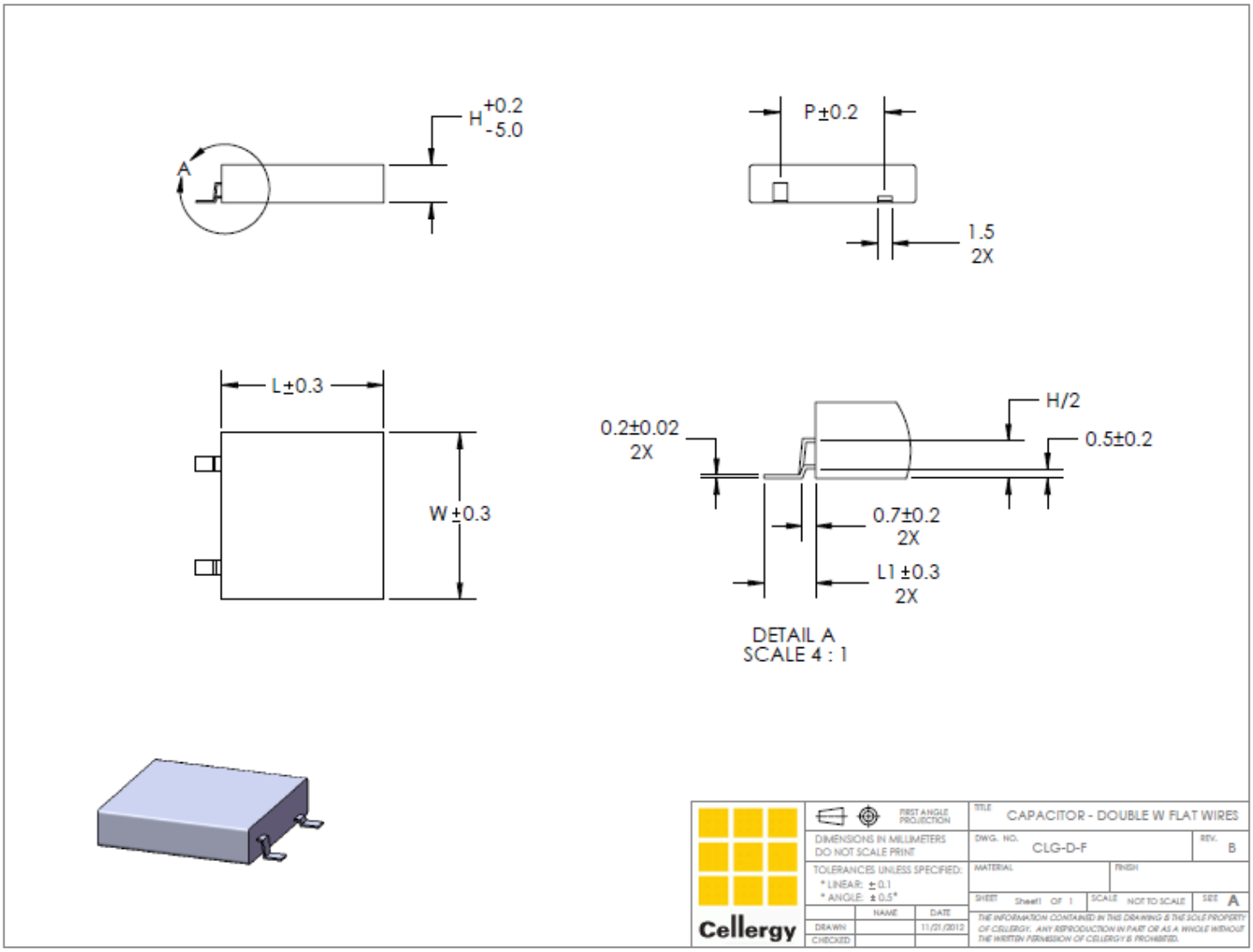

P/N	V [V]	ESR [mΩ]	Cap [mF]	LC [μA]	L [mm]	W [mm]	L1 [mm]	H [mm]	P [mm]
CLG03P025F12	3.5	300	25	6	12	12.5	2.7	3.4	7.3
CLG04P020F12	4.2	360	20	6	12	12.5	2.7	3.9	7.3
CLG03P050F17	3.5	150	50	12	17	17.5	3.7	3.4	11
CLG04P040F17	4.2	180	40	12	17	17.5	3.7	3.9	11
CLG03P120F28	3.5	65	120	20	28	17.5	3.7	3.4	11
CLG04P100F28	4.2	75	100	20	28	17.5	3.7	3.9	11

Cell Structure

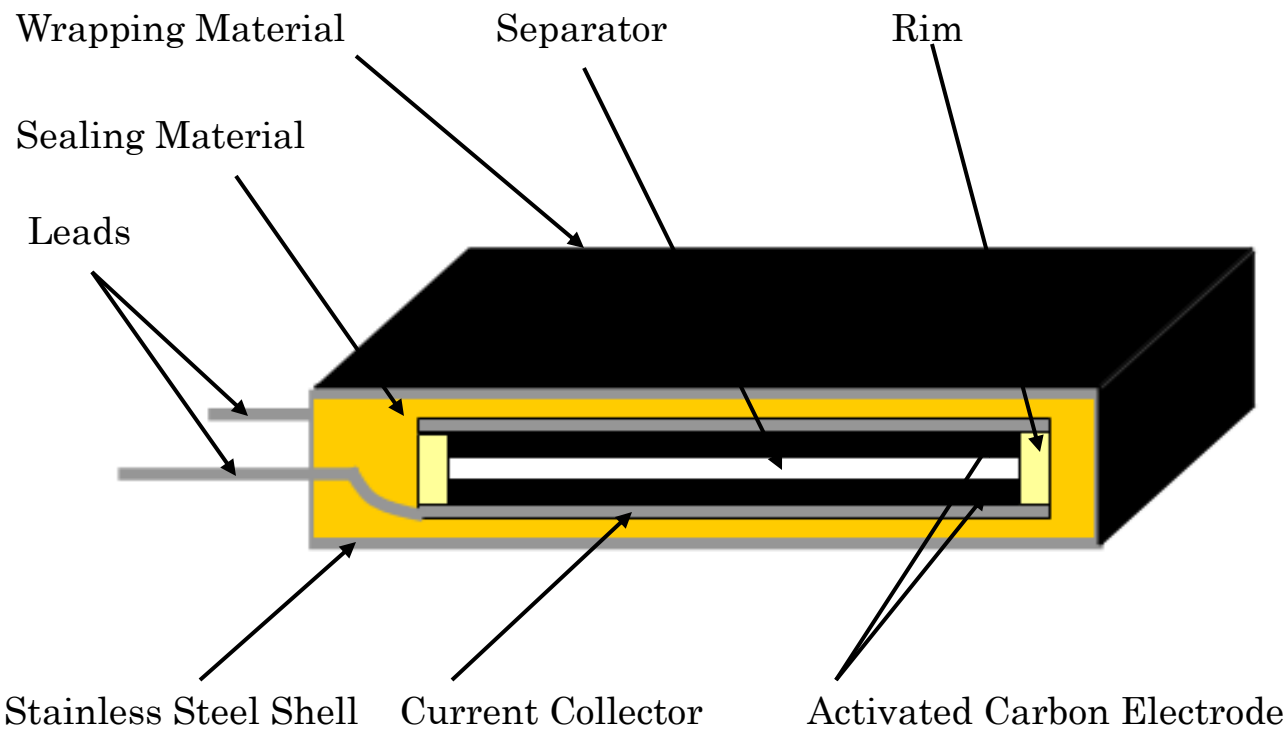

Cellergy's products typically do not have polarity as the electrodes are symmetrical.

Voltage is applied to the capacitors during Cellergy's qualification tests and the capacitor may be sent to the customer with residual voltages remaining after shorting the cells.
Accordingly plus / minus signs are designated in accordance with Cellergy Q&R procedures.

Packing (CL...12)

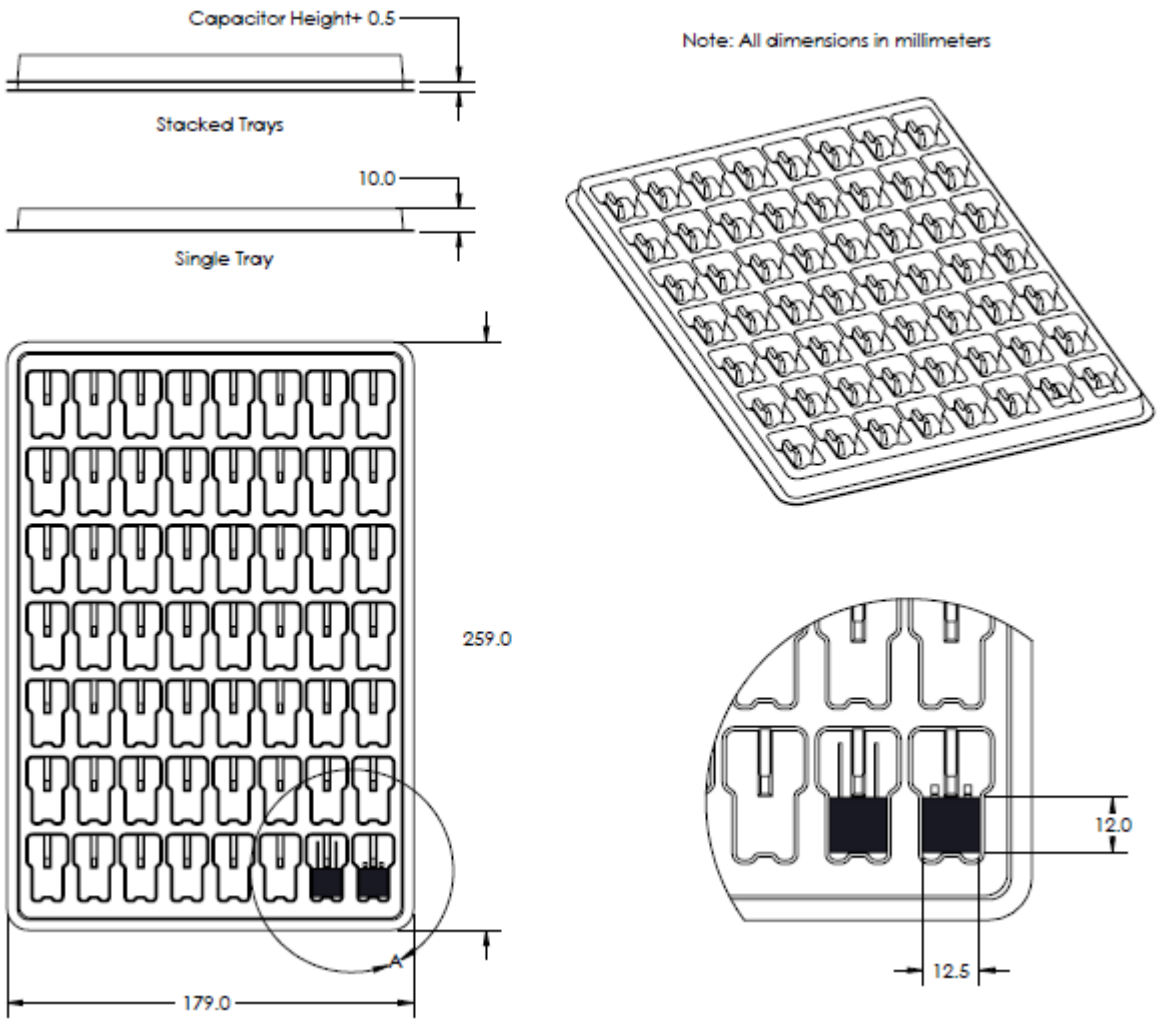

Supercapacitors per tray	Supercapacitor type
112	Single
56	Double

CL...12 tray weight： 31 gr.

CL...12 tray material: Transparent PVC

Revision: 13-02-13
Subject to change without notice

Packing (CL...17)

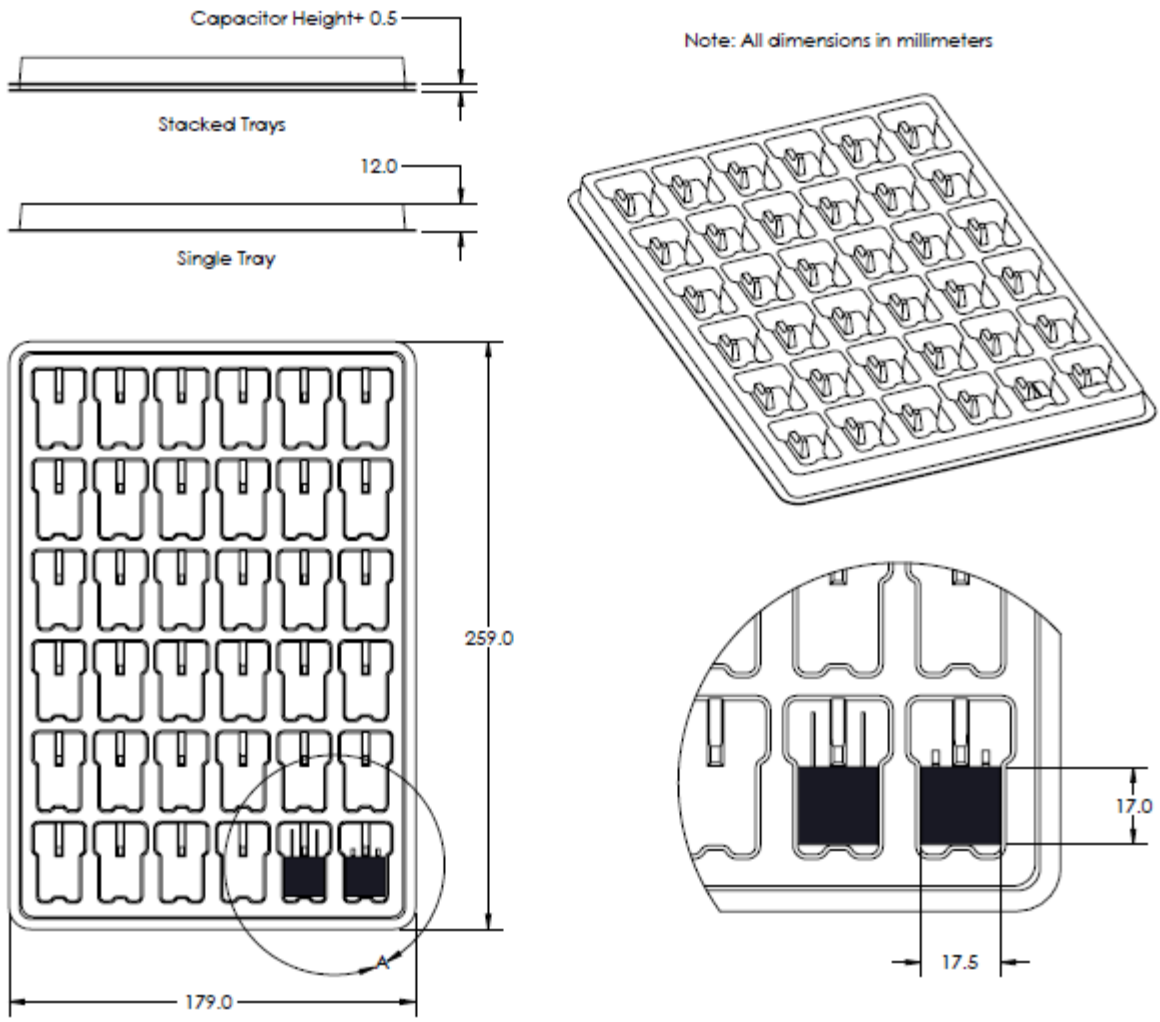

Supercapacitors per tray	Supercapacitor type
72	Single
36	Double

CL...17 tray weight： 30 gr.

CL...17 tray material: Transparent PVC

Revision: 13-02-13
Subject to change without notice

Packing (CL...28)

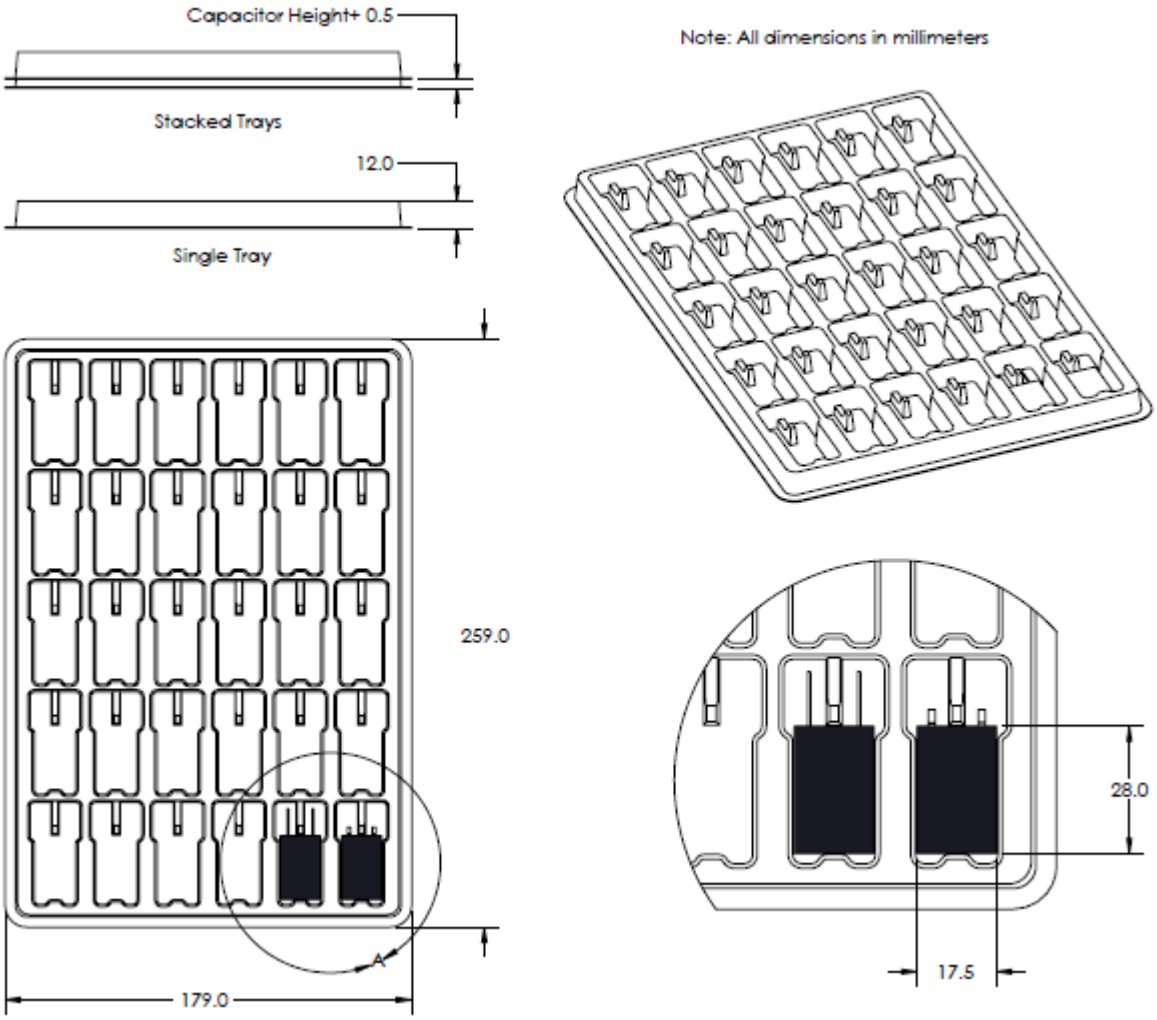

Supercapacitors per tray	Supercapacitor type
60	Single
30	Double

CL...28 tray weight： 32 gr.

CL...28 tray material: Transparent PVC

Revision: 13-02-13
Subject to change without notice

Cellergy

Qualification Test Summary

No.	Item	Test Method	Limits
1	Initial capacitance	Charge to rated voltage for 10min. discharge at constant current, C=Idt/dv (details in the page 19)	+80% / -20% of rated value
2	Initial leakage current	Charge to rated voltage 12 hr measure current (details in the page 19)	Within Limits (refer to max. LC values in line card table)
3	Initial ESR	Measure @ 1 KHz, Voltage 20mV amplitude, (details in the page 19)	+20% / -50% of rated value
4	Endurance	1000 hrs at 70°C at rated voltage (500 hrs at 70°C for 12x12 foot print products) (500 hrs at 85°C for CLK series products) Cool to RT measure: ESR,LC,C	LC < 3.0x rated value Cap > 0.7x rated value ESR < 3.0x rated value
5	Humidity life	1000 hrs at 40°C 90-95% humidity no voltage Cool to RT measure: ESR,LC,C	LC < 1.5x rated value Cap > 0.9x rated value ESR < 1.5x rated value
6	Robustness of terminations	In accordance with IEC 62391-1 and subjected to test Ub: bending of IEC 60068-2-21, method 2; two or more bends in an angle of 90º in the same direction	LC : rated value Cap : rated value ESR : rated value No visual damage
7	Surge voltage	Apply 15% voltage above rated voltage for 10 sec short cells 10 seconds repeat procedure 1000 times measure ESR,LC,C	LC : < 2.0x rated value Cap : > 0.7x rated value ESR: < 2.0x rated value
8	Temperature cycling	Each cycle consist of following steps: 1) Place supercapacitor in cold chamber (–40C) hold for 30 min 2) Transfer supercapacitor to hot chamber (+70C) in 2 to 3 minutes. 3) Hold supercapacitor in hot chamber for 30 min Number of cycles: 5	LC : < 1.5x rated value Cap: > 0.9x rated value ESR: < 1.5x rated value
9	Vibration	Frequency = 10 to 55 Hz Amplitude of vibration: 0.75 mm 2 hours each in three directions, (Total 6 hours)	LC : rated value Cap : rated value ESR : rated value No visual damage

Measuring Method of Characteristics

Initial Capacitance
(Based on international standard IEC 62391-1)

1) Charge the capacitor to nominal voltage (V_nom) for 30 minutes by constant voltage.
2) Discharge the capacitor with constant current (I_dsch) from voltage (V1 = 80% of V_nom) to the voltage (V2 = 40% of V_nom) while measure discharge time (Δt).
3) Calculate capacitance using following formula

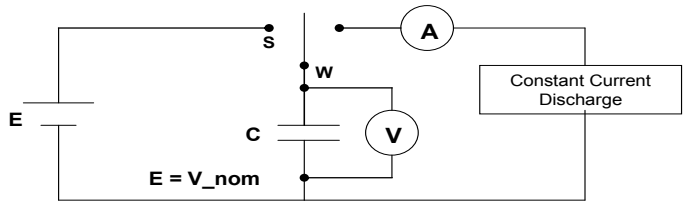

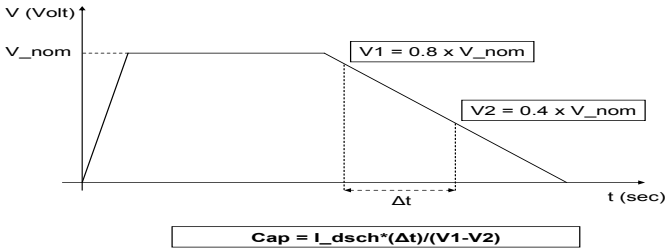

According to international standard IEC 62391-1, the suggested **I_dsch** values are:

CLG Family	L12	L12	L17	L17	L28	L28	L48	L48
Max. allowed Leakage Current	3uA	6uA	6uA	12uA	10uA	20uA	30uA	60uA
I_dsch	2 mA	5 mA	5 mA	10 mA	10 mA	20 mA	30 mA	60 mA

Initial ESR @ 1Khz

(Equivalent Series Resistance)

1) Measure ESR by HIOKI Model 3560 AC Low Ohmmeter

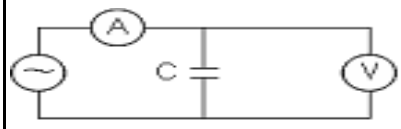

ESR[Ω] = V / i

Initial Leakage Current

1) Apply Nominal voltage to the capacitor.
2) Measure Vr after 12±1 hours.
3) Calculate current using following formula.

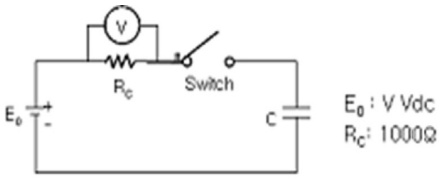

$LC = (V_R / R_C) \times 10^3$ [mA]

Revision: 13-02-13
Subject to change without notice

Typical Capacitor Characteristics

ESR vs. Temperature

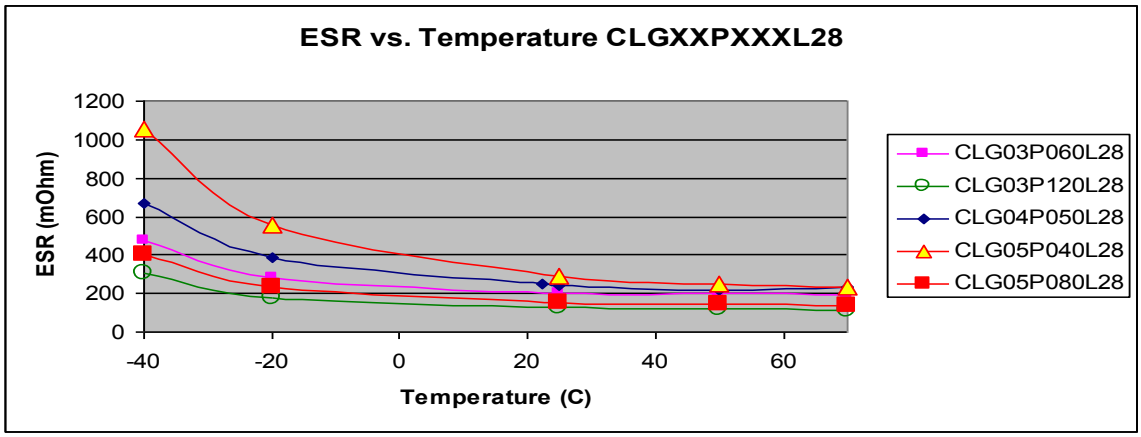

Capacitance vs. Temperature

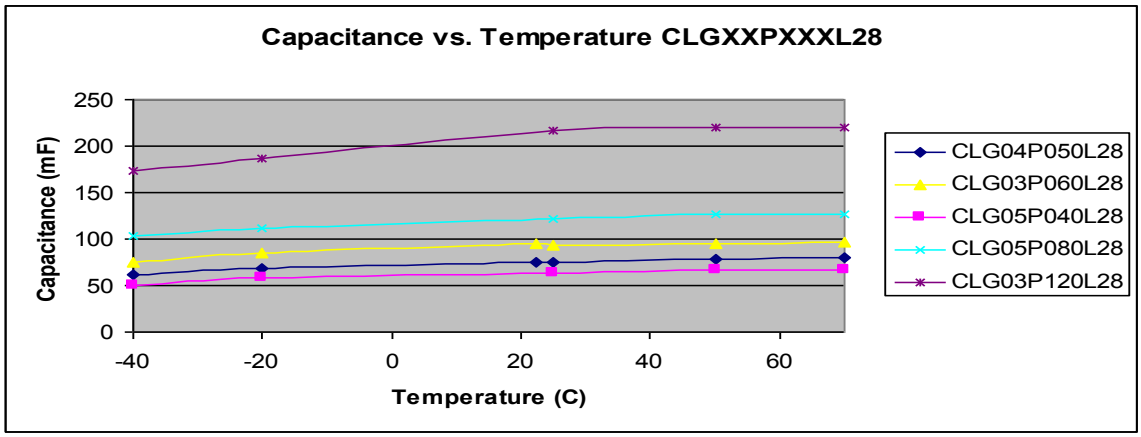

Capacitance vs. Frequency

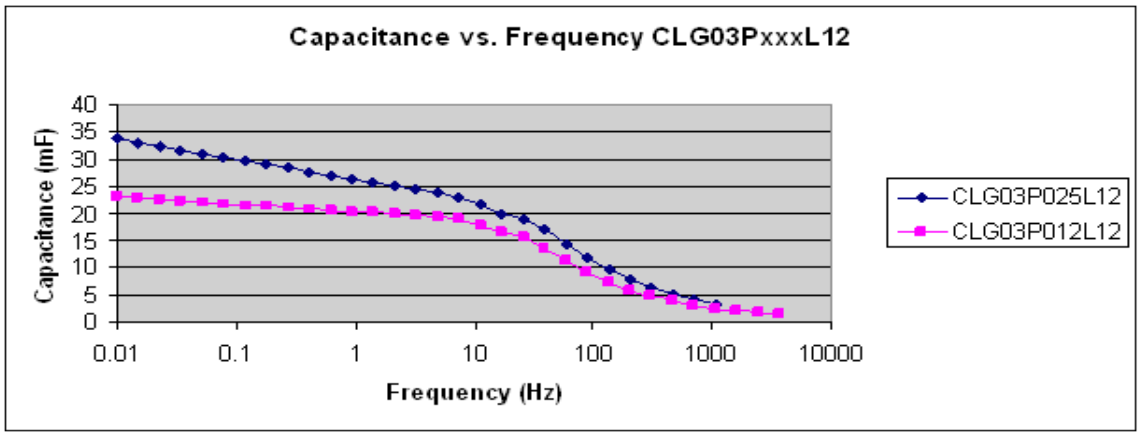

1. Background

Film capacitors store charge by means of two layers of conductive film that are separated by a dielectric material. The charge accumulates on both
conductive film layers, yet remains separated due to the dielectric between the conductive films.
Electrolytic capacitors are composed of metal to which is added a thin layer of non-conductive metal oxide which serves as the dielectric.
These capacitors have an inherently larger capacitance than that of standard film capacitors.
In both cases the capacitance is generated by electronic charge and therefore the power capability of these types of capacitors is relatively high while the
energy density is much lower.
The Electrochemical Double Layer Capacitor (EDLC) or Super Capacitor is a form of hybrid between conventional capacitors and the battery.
The electrochemical capacitor is based on the double layer phenomena
occurring between a conductive solid and a solution interphase.
The capacitance, coined the "double layer capacitance", is the result of charge separation in the interphase. On the solid electrode, electronic charge is
accumulated and in the solution counter charge is accumulated in the form of ionic charge.
The EDLC embodies high power and high energy density (Fig. 1).

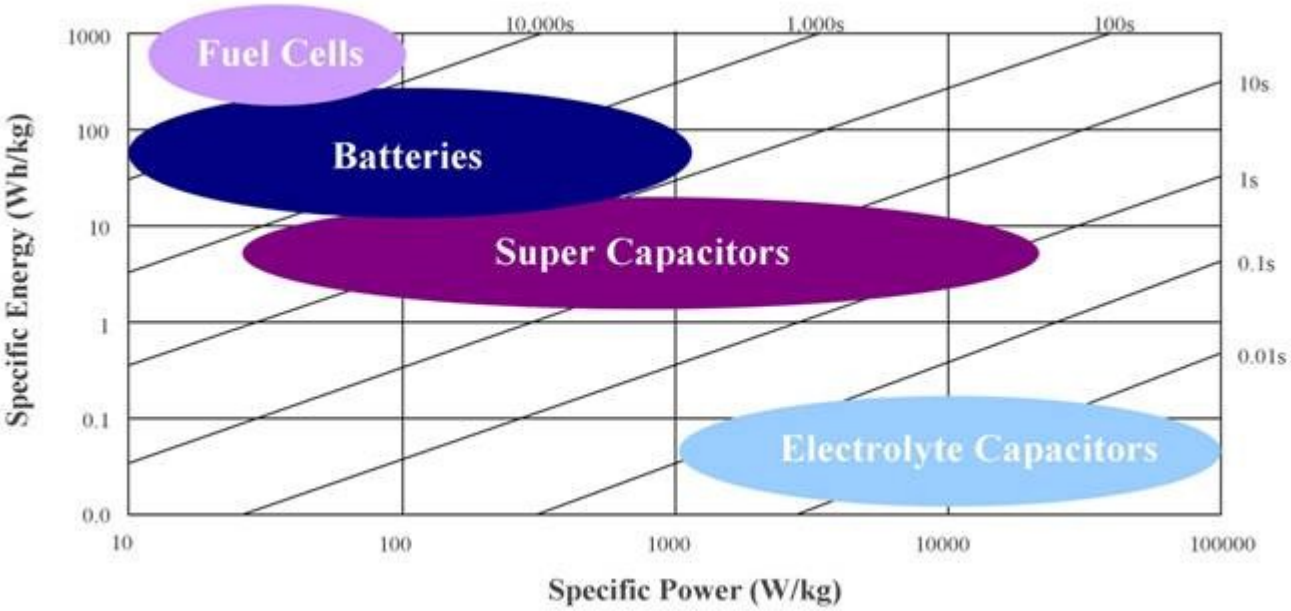

Fig. 1

Electrochemical Capacitors

The operating principle of the super capacitor is similar to that of a battery. Pairs of electrodes are separated by an ionic conductive, yet electrically insulating, separator (Fig. 2). When a super capacitor is charged, electronic charge accumulates on the electrodes (conductive carbon) and ions (from the electrolyte) of opposite charge approach the electronic charge.

This phenomenon is coined "the double layer phenomenon".

The distance between the electronic and the ionic charges is very small, roughly 1 nanometer, yet electronic tunneling does not occur.

Between charging and discharging, ions and electrons shift locations.

In the charged state a high concentration of ions will be located along the electronically charged carbon surface (electrodes).

As the electrons flow through an external discharge circuit, slower moving ions will shift away from the double layer. During EDLC cycling electrons and ions constantly move in the capacitor, yet no chemical reaction occurs.

Therefore electrochemical capacitors can undergo millions of charge and discharge cycles. This phenomenon which occurs with carbon electrodes of very high surface area and a three-dimensional structure, leads to incredibly high capacitance as compared to standard capacitors.

One can envision the model of the EDLC as two capacitors formed by the solid (carbon) liquid (electrolyte) interphase separated by a conductive ionic membrane. An equivalent electronic model is two capacitors in a series connection (Fig. 3) where C_{dl} is the capacitance of each electrode; R_p is the parallel resistance to the electrode, R_s is the resistance of the separator.

We conclude that the energy density of electrochemical capacitors is higher than that of electrolytic capacitors, and therefore they have applicability for systems with lower frequency requirements.

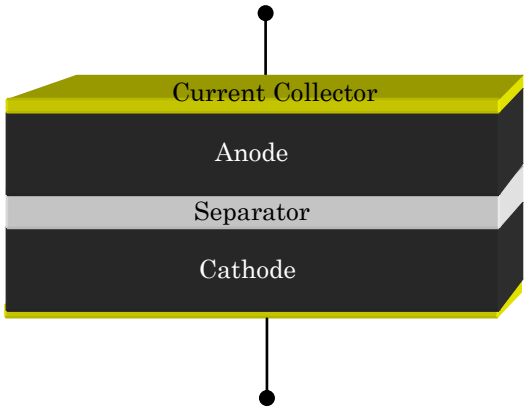

Fig. 2

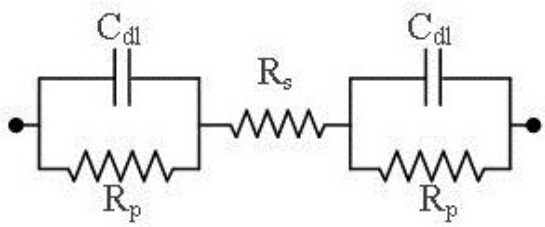

Fig. 3

Revision: 13-02-13
Subject to change without notice

Cellergy's Technology

By use of a unique patented production and manufacturing process, Cellergy has developed a small footprint, low Equivalent Series Resistance (ESR), high frequency EDLC capable of storing relatively large amounts of energy.
The development is based on an innovative printing technology allowing the production of EDLC's in many different sizes with varied dimensions and shapes.
In fact, Cellergy produces one of the smallest low ESR footprint EDLC's on the market today.
Since the patented printing technology is based on conventional printing techniques, the manufacturing process is simple and unique, and it is possible to manufacture large wafers of EDLC's.
The basis of the technology is a printable aqueous electrode paste based on a high surface area carbon paste that is printed in an electrode matrix structure on an electronically conductive film.
The electrodes are then encapsulated with a porous ionic conducting separator and another electrode matrix is then printed on the separator.
This bipolar printing process is repeated as many times as required enabling us to tailor our product to the specifications of the end user.
The finished wafer is then cut into individual EDLC's that are then packaged.
Cellergy's EDLC's boasts low equivalent series resistance as well as a low leakage current due to our unique encapsulation technology and electrode composition.
Cellergy's EDLC's require no cell balancing or de-rating.
The combination of the separator and carbon paste lead to the capability of very high power bursts within low milli-second pulse widths.
Cellergy's technology is based on aqueous components that are all environmentally friendly and non-toxic. Though the system is water based, the capacitor can work at temperatures between -40°C and 70°C.
This working temperature range is achieved by the unique water based electrolyte that impregnates the high surface carbon.
Because the chemistry of the system is based on water, the performance of Cellergy's EDLC's is not affected by humidity.

Application Notes for EDLC

Cellergy's super capacitors offer high power and high energy.
This characteristic coupled with a battery offer the designer a unique opportunity to solve power related issues.
The following table lists the characteristics of the EDLC (Table 1):

Table 1

Characteristics	
Working Voltage	1.4-12 volts
De-rating	Not required
Capacitance	10-100's of mF
Foot print	12x12.5mm, 17x17.5mm, 28x17.5mm, 48x30.5mm
Operating Temperatures	-40°C to +70°C CLG, CLC -40°C to +85°C CLK
ESR	10's-100's mΩ
Safety	Environmentally friendly materials, No toxic fumes upon burning
Power	10's of Watts, short pulse widths
Polarity	No polarity
Number of charge/discharge cycles	Over 500000

Revision: 13-02-13
Subject to change without notice

Voltage Drop

Two main factors affect the voltage drop of all capacitors including EDLC's.
The first voltage drop is defined as the ***Ohmic voltage drop***.
The capacitor has an internal resistance defined as ESR (Equivalent Series Resistance).
As current flows through the capacitor, a voltage drop occurs that obeys Ohms law. This voltage drop is instantaneous and will diminish the moment that no current is drawn.
The second voltage drop (***capacitance related voltage drop***) is due to capacitor discharge.
The voltage of the capacitor is directly proportional to the charge accumulated in the capacitor. During current discharge, capacitance is consumed (current emitting from the capacitor) thus causing a linear voltage decrease in the capacitor. When the current is stopped, the voltage of the capacitor indicates the charge left in the capacitor. The combination of the Ohmic related voltage drop and the capacitance related voltage drop determine the actual ***working voltage window*** of an EDLC under drain conditions (Fig. 4).

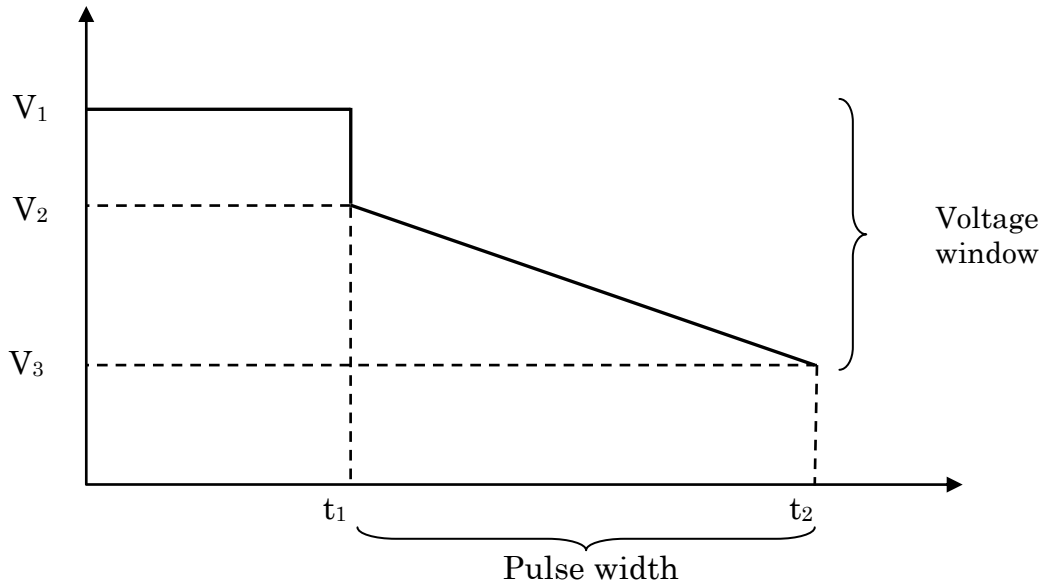

Fig. 4

Ohmic voltage drop $= V_1 - V_2 = I_{pulse} * ESR$
Capacitance related voltage drop $= V_2 - V_3 = I_{pulse} * (t_2 - t_1)/C$
Working voltage window $= V_1 - V_3 = I_{pulse} * ESR + I_{pulse} * (t_2 - t_1)/C$

*Where C is Capacitance

Revision: 13-02-13
Subject to change without notice

EDLC and Battery Coupling

Under drain conditions, a battery undergoes a voltage drop similarly to the EDLC. Because of many physical and chemical constraints, the battery often cannot supply the power required while still retaining its open circuit voltage.

The working voltage of the battery reflects the load on the battery, thus the larger the voltage drop of the battery the larger the load on the battery.

Many difficulties are encountered by the designer planning the online power demand of a system, mainly because the power of the batteries is limited.

If the battery must supply high power at short pulse widths, the voltage drop may be too great to supply the power and voltage required by the end product (cutoff voltage).

The large load on the battery may decrease the useful energy stored in the battery and even may harm the battery and shorten its work life.

This problem may be resolved by connecting the battery in parallel to an EDLC (Fig. 5).

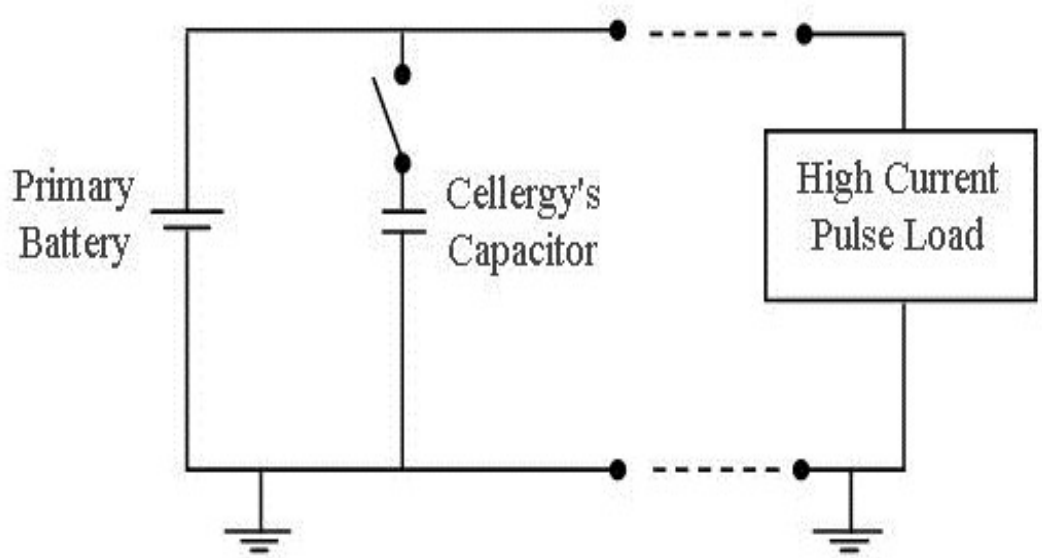

Fig. 5

EDLC and Battery Coupling (Continued)

Under conditions of high power and short duration current pulses, a ***voltage damping effect*** will be achieved. The voltage drop of the battery will be decreased resulting in better energy management and superior energy density of the battery (Fig. 6).
The power supplied will be produced by both the EDLC and the battery, and each will supply the relative power inversely to its own ESR.
The inefficiency of batteries at lower temperatures is well known.
The capacitance of most batteries decreases with decreasing temperatures.
This decrease is due to the slow kinetics of the chemical reaction in the battery which increases the internal resistance of the battery.
At low temperatures, the voltage drop of the battery increases and reduces the usefulness of the battery. This voltage drop can be reduced greatly by coupling of the battery and the EDLC.
In conclusion, coupling the battery and EDLC results in superior power management for many short interval and high power applications.

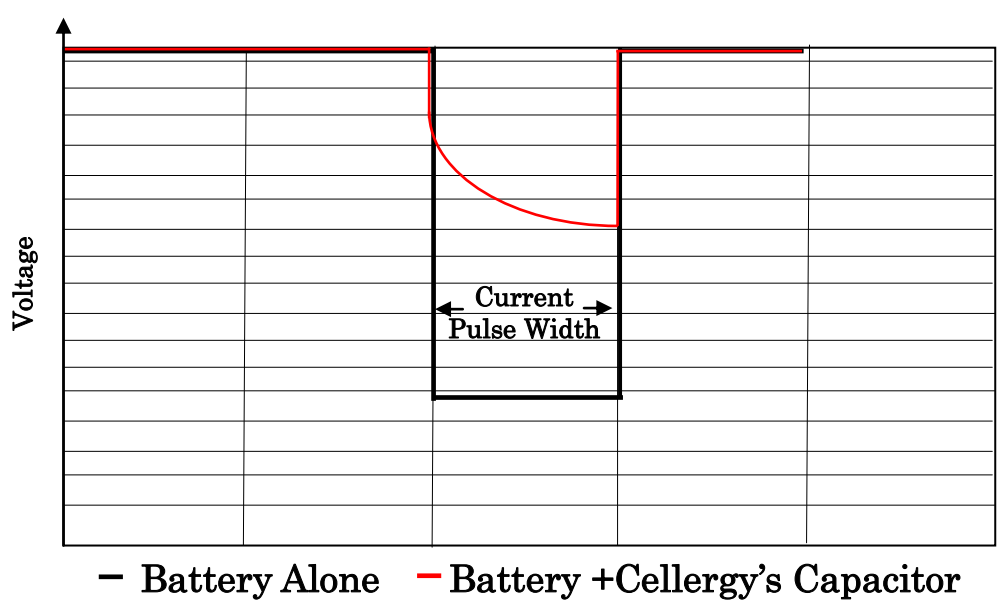

Fig. 6

Revision: 13-02-13
Subject to change without notice

Distinct Applications for Cellergy's Super Capacitors

- Extending battery lifetimes – by connecting a primary battery in parallel to Cellergy's capacitor, the designer can reduce the voltage drop during a high current pulse.
- Extending secondary battery operation - Reducing voltage drop at low temperatures (-40°C).
- CF, PCMCIA Cards - Cellergy's EDLC overcome the current limitation encountered when connecting boards in an application utilizing batteries.
- Backup or current booster for mechanical applications such as a DC motor.
- Extending the battery lifetime of digital cameras.
- Rechargeable backup power source for microprocessors, static RAM's and DAT.
- AMR – Automatic Meter Readings.
- GPS-GSM Modules.
- Active RFID
- Wireless Sensors Network
- SSD
- Medical Micro Pump
- Industrial PDA
- Camera Flash
- Energy Harvesting

Manual Soldering

Upon using a soldering iron, it should not touch the cell body.

Temperature of the soldering iron should be less than 410℃ (leaded soldering profile) or 435℃ (lead free soldering profile) .
Soldering time for terminals should be less than 5 seconds or 3 seconds respectively.

Handling Cautions

1) Do not apply more than rated voltage.
   If you apply more than rated voltage, Cellergy electrolyte will be electrolyzed and the super capacitors ESR may increase.

2) Do not use Cellergy for ripple absorption.

3) Operating temperature and life
   Generally, Cellergy has a lower leakage current, longer back-up time and longer life in the low temperature range i.e. the room temperature. It will have a higher leakage current and a shorter life at elevated temperatures.
   Please design the Cellergy such that is not adjacent to heat emitting elements.

4) Short-circuit Cellergy
   You can short-circuit between terminals of Cellergy without a resistor. However when you short-circuit frequently, please consult us.

5) Storage
   In long term storage, please store Cellergy in following condition;
   1) TEMP. : -10 ~ +35 °C
   2) HUMIDITY : 45 ~ 75 %RH
   3) NON-DUST

6) Do not disassemble Cellergy products. It contains electrolyte.

7) The tips of Cellergy terminals are very sharp. Please handle with care.

8) Reflow process is not recommended for Cellergy capacitors.

Note
The Cellergy EDLC is a water based component. Extended use of the EDLC at elevated temperatures may cause evaporation of water leading to ESR increase.

Revision: 13-02-13
Subject to change without notice

Contact :
7 Hauman St. South Industrial Zone Migdal Haemek P.O.B 631 23105 ISRAEL
Phone:+972-4-6544300, Fax:+972-4-6542764