Power line chokes

Current-compensated U core double chokes
300 V AC, 0.4 … 2.6 A, 0.33 … 15 mH, +40° C

Series/Type: **B82730U/G**

Date: July 2012

© EPCOS AG 2015. Reproduction, publication and dissemination of this publication, enclosures hereto and the information contained therein without EPCOS' prior express consent is prohibited.

EPCOS AG is a TDK Group Company.

Rated voltage 300 V AC
Rated current 0.4 ... 2.6 A
Rated inductance 0.33 ... 15 mH

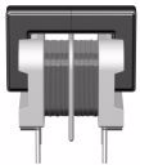

B82730U

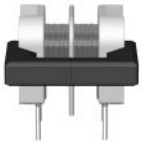

B82730G

Construction

- Current-compensated U-core double choke
- Ferrite core
- Closed PET coil former (UL 94 V-0)
- Without encapsulation
- Creepage distances ≥ 4 mm

Features

- High resonance frequency
- Approx. 1.3% stray inductance for symmetrical interference suppression
- Low whirring noise
- Suitable for wave soldering
- Design complies with EN 60938-2 (VDE 0565-2) and UL 1283
- UL 1446 class 155(F) electrical insulation system
- VDE and UL approvals
- Plastic material approved to EN 60335-1, clause 30, Glow wire test (GWT): EN 60695 (+850 °C)
- RoHS-compatible

Applications

- Suppression of common-mode interferences
- Compact switch-mode power applications
- Electronic ballasts in lamps
- Suitable for white goods applications

Terminals

- Base material CP wire
- Hot-dipped
- Pins ∅ 0.6 mm
- Lead spacing 7 × 8 mm

Marking

Manufacturer's logo, ordering code (shortened), date of manufacture (WWYY), factory identification code

Delivery mode

Polystyrene tray (anti-static) in cardboard box

Dimensional drawing and pin configuration

Vertical version B82730U

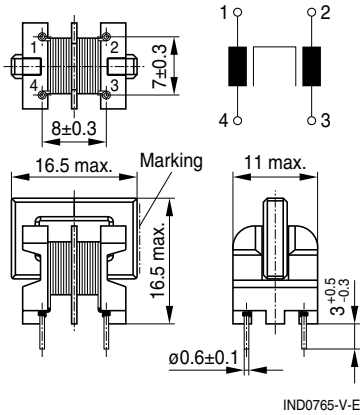

Tolerances to ISO 2768-C unless otherwise noted

Dimensions in mm

Horizontal version B82730G

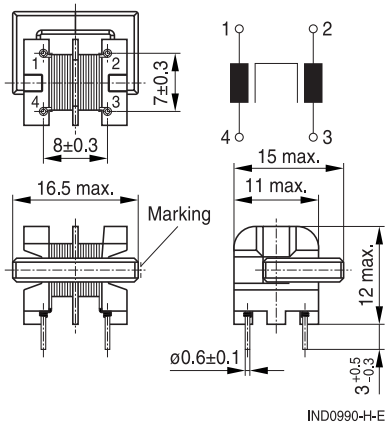

Tolerances to ISO 2768-C unless otherwise noted

Dimensions in mm

Technical data and measuring conditions

Rated voltage V_R	300 V AC (50/60 Hz)
Test voltage V_{test}	2000 V AC, 2 s (line/line)
Rated temperature T_R	+40 °C
Rated current I_R	Referred to 50 Hz and rated temperature
Rated inductance L_R	Measured with Agilent 4284A at 0.1 mA, +20 °C Measuring frequency: $L_R \leq 1$ mH = 100 kHz $L_R > 1$ mH = 10 kHz Inductance is specified per winding
Inductance tolerance	–30/+50% at +20 °C
Inductance decrease $\Delta L/L_0$	<10% at DC magnetic bias with I_R, +20 °C
Stray inductance $L_{stray,typ}$	Measured with Agilent 4284A at 5 mA, +20 °C, typical values Measuring frequency: $L_R \leq 1$ mH = 100 kHz $L_R > 1$ mH = 10 kHz
DC resistance R_{typ}	Measured at +20 °C, typical values, specified per winding
Solderability (lead-free)	Sn96.5Ag3.0Cu0.5: +(245 ±5) °C, (3 ±0.3) s Wetting of soldering area ≥ 95% (to IEC 60068-2-20, test Ta)
Resistance to soldering heat (wave soldering)	+(260 ±5) °C, (10 ±1) s (to IEC 60068-2-20, test Tb)
Climatic category	40/125/56 (to IEC 60068-1)
Storage conditions (packaged)	–25 °C … +40 °C, ≤ 75% RH
Weight	Approx. 4 g
Approvals	EN 60938-2, UL 1283, UL 1446

Characteristics and ordering codes

I_R	L_R	$L_{stray,typ}$	R_{typ}	Ordering code		Approvals	
A	mH	µH	mΩ	Vertical version	Horizontal version		
0.40	15	200	2400	B82730U3401A020	B82730G3401A020	×	×
0.45	10	140	1750	B82730U3451A020	B82730G3451A020	×	×
0.60	4.7	70	920	B82730U3601A020	B82730G3601A020	×	×
0.75	3.9	55	700	B82730U3751A020	B82730G3751A020	×	×
0.95	2.2	30	410	B82730U3951A020	B82730G3951A020	×	×
1.0	1.8	25	340	B82730U3102A020	B82730G3102A020	×	×
1.6	1.0	14	160	B82730U3162A020	B82730G3162A020	×	×
2.6	0.33	5	60	B82730U3262A020	B82730G3262A020	×	×

× = approval granted

Impedance |Z| versus frequency f
measured with windings in parallel at +20 °C, typical values

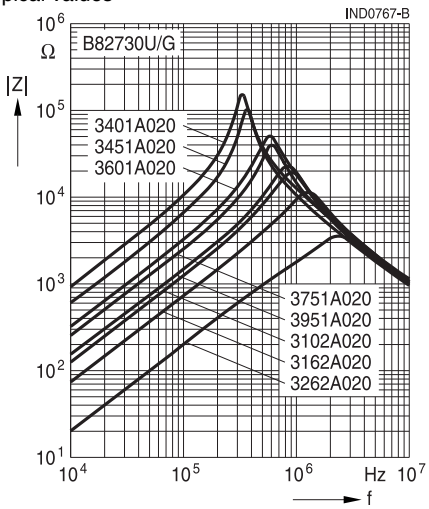

Current derating I_{op}/I_R versus temperature T_A

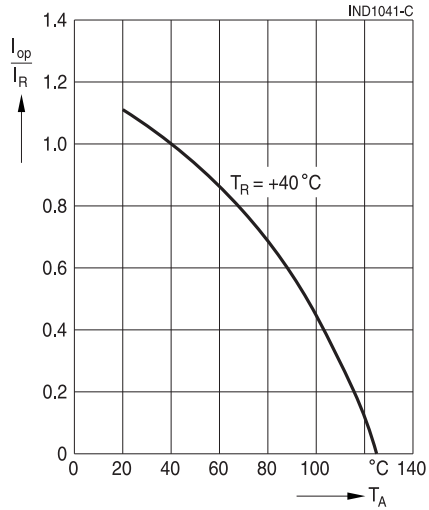

Cautions and warnings

- Please note the recommendations in our Inductors data book (latest edition) and in the data sheets.
  - Particular attention should be paid to the derating curves given there. Derating must be applied in case the ambient temperature in the application exceeds the rated temperature of the component.
  - Ensure the operation temperature (which is the sum of the ambient temperature and the temperature rise caused by losses / self-heating) of the component in the application does not exceed the maximum value specified in the climatic category.
  - The soldering conditions should also be observed. Temperatures quoted in relation to wave soldering refer to the pin, not the housing.
- If the components are to be washed varnished it is necessary to check whether the washing varnish agent that is used has a negative effect on the wire insulation, any plastics that are used, or on glued joints. In particular, it is possible for washing varnish agent residues to have a negative effect in the long-term on wire insulation.
  Washing processes may damage the product due to the possible static or cyclic mechanical loads (e.g. ultrasonic cleaning). They may cause cracks to develop on the product and its parts, which might lead to reduced reliability or lifetime.
- The following points must be observed if the components are potted in customer applications:
  - Many potting materials shrink as they harden. They therefore exert a pressure on the plastic housing or core. This pressure can have a deleterious effect on electrical properties, and in extreme cases can damage the core or plastic housing mechanically.
  - It is necessary to check whether the potting material used attacks or destroys the wire insulation, plastics or glue.
  - The effect of the potting material can change the high-frequency behaviour of the components.
- Ferrites are sensitive to direct impact. This can cause the core material to flake, or lead to breakage of the core.
- Even for customer-specific products, conclusive validation of the component in the circuit can only be carried out by the customer.

Important notes

The following applies to all products named in this publication:

1. Some parts of this publication contain **statements about the suitability of our products for certain areas of application**. These statements are based on our knowledge of typical requirements that are often placed on our products in the areas of application concerned. We nevertheless expressly point out **that such statements cannot be regarded as binding statements about the suitability of our products for a particular customer application.** As a rule, EPCOS is either unfamiliar with individual customer applications or less familiar with them than the customers themselves. For these reasons, it is always ultimately incumbent on the customer to check and decide whether an EPCOS product with the properties described in the product specification is suitable for use in a particular customer application.

2. We also point out that **in individual cases, a malfunction of electronic components or failure before the end of their usual service life cannot be completely ruled out in the current state of the art, even if they are operated as specified.** In customer applications requiring a very high level of operational safety and especially in customer applications in which the malfunction or failure of an electronic component could endanger human life or health (e.g. in accident prevention or life-saving systems), it must therefore be ensured by means of suitable design of the customer application or other action taken by the customer (e.g. installation of protective circuitry or redundancy) that no injury or damage is sustained by third parties in the event of malfunction or failure of an electronic component.

3. **The warnings, cautions and product-specific notes must be observed**.

4. In order to satisfy certain technical requirements, **some of the products described in this publication may contain substances subject to restrictions in certain jurisdictions (e.g. because they are classed as hazardous)**. Useful information on this will be found in our Material Data Sheets on the Internet (www.epcos.com/material). Should you have any more detailed questions, please contact our sales offices.

5. We constantly strive to improve our products. Consequently, **the products described in this publication may change from time to time**. The same is true of the corresponding product specifications. Please check therefore to what extent product descriptions and specifications contained in this publication are still applicable before or when you place an order.

   We also **reserve the right to discontinue production and delivery of products**. Consequently, we cannot guarantee that all products named in this publication will always be available. The aforementioned does not apply in the case of individual agreements deviating from the foregoing for customer-specific products.

6. Unless otherwise agreed in individual contracts, **all orders are subject to the current version of the "General Terms of Delivery for Products and Services in the Electrical Industry" published by the German Electrical and Electronics Industry Association (ZVEI)**.

7. The trade names EPCOS, BAOKE, Alu-X, CeraDiode, CeraLink, CSMP, CSSP, CTVS, DeltaCap, DigiSiMic, DSSP, FilterCap, FormFit, MiniBlue, MiniCell, MKD, MKK, MLSC, MotorCap, PCC, PhaseCap, PhaseCube, PhaseMod, PhiCap, SIFERRIT, SIFI, SIKOREL, SilverCap, SIMDAD, SiMic, SIMID, SineFormer, SIOV, SIP5D, SIP5K, ThermoFuse, WindCap are **trademarks registered or pending** in Europe and in other countries. Further information will be found on the Internet at www.epcos.com/trademarks.

Mouser Electronics

Authorized Distributor

Click to View Pricing, Inventory, Delivery & Lifecycle Information:

EPCOS:
B82730U3102A020 B82730U3162A020 B82730U3262A020 B82730U3401A020 B82730U3451A020
B82730U3601A020 B82730U3751A020 B82730U3951A020