THIS DRAWING IS UNPUBLISHED. RELEASED FOR PUBLICATION - ,- .
© COPYRIGHT - By - ALL RIGHTS RESERVED.

LOC	DIST
AD	00

REVISIONS

P	LTR	DESCRIPTION	DATE	DWN	APVD
	B2	REVISED PER ECR-12-001856	30JAN12	W.W	C.W

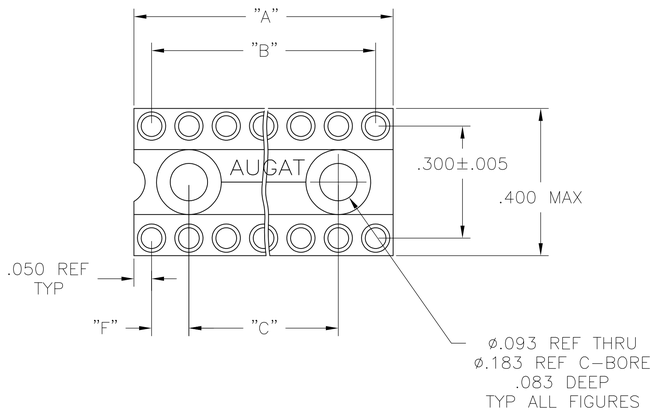

FIG. 1

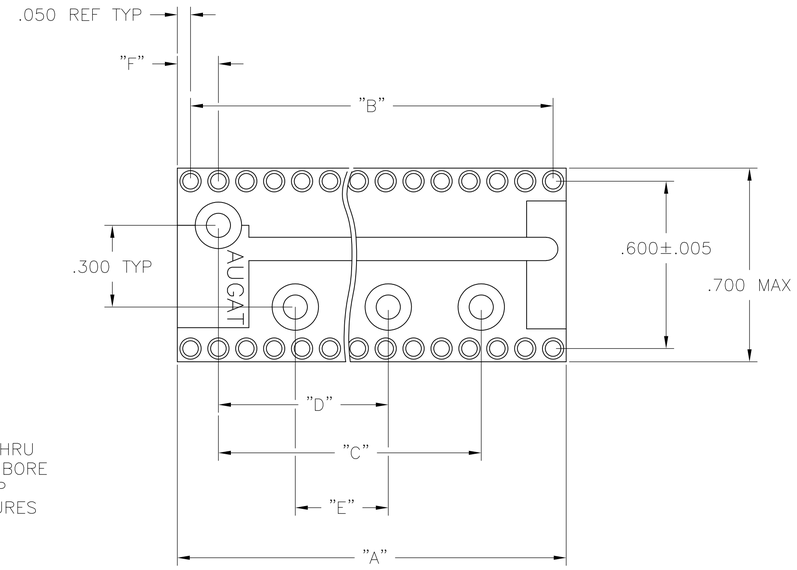

FIG. 2

1. INSULATOR MATERIAL – THERMOPLASTIC POLYESTER, PCT, BLACK, UL94 V-0.
2. MACHINED CONTACT – BECU, PLATED WITH 80-200 μ IN THK, TIN (LEAD FREE) OVER 75-100 μ IN THK COPPER.
3. SLEEVE – COPPER, PLATED WITH 180-340 μ IN THK TIN (LEAD FREE) OVER 75-100 μ IN THK NICKEL.
4. MACHINED CONTACT – BECU, PLATED WITH 25 μ IN MIN. GOLD OVER 30-100 NICKEL.
5. ELECTRICAL:
   CONTACT RESISTANCE: 10 MILLIOHMS MAX
   CONTACT RATING: 3 AMPS
   CAPACITANCE: 1.0 pF PER MIL-STD-202, METHOD 305
   INSULATION RESISTANCE: 5000 MΩ MIN @ 500 VDC PER EIA-364-21
   DIELECTRIC WITHSTANDING VOLTAGE: 1000 VOLTS (RMS) PER EIA-364-20
6. MECHANICAL:
   AFTER INSERTION FORCE: 134 GRAMS AVG
   AFTER WITHDRAWAL FORCE: 63 GRAMS AVG
   ACCEPTS IC PIN-.009"x.015" THROUGH .011"x.020", OR .016" TO .021" DIAMETER, .150/.105 LONG
7. ENVIRONMENTAL:
   OPERATING TEMPERATURE: -55°C TO -105°C

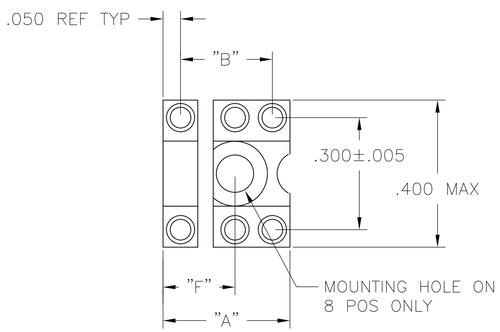

FIG. 3

6 POS MOUNTING HOLE OMITTED

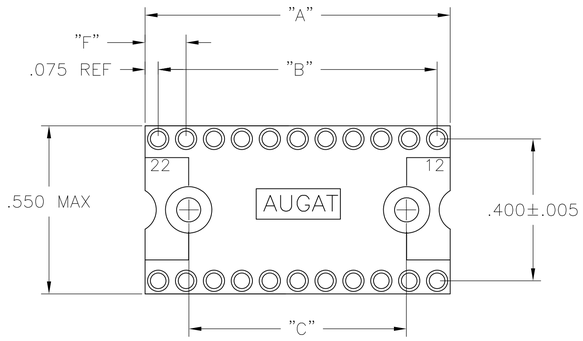

FIG. 4

3	4	4	.150	–	–	.900	1.100	1.200	24	3-1571550-3
3	4	2	.150	.500	.900	1.500	1.900	2.000	40	3-1571550-2
3	4	2	.150	.500	.900	1.500	1.700	1.800	36	3-1571550-1
3	4	2	.150	.500	.900	–	1.500	1.600	32	3-1571550-0
3	4	2	.150	.500	.900	–	1.300	1.400	28	2-1571550-9
3	4	2	.150	.500	.900	–	1.100	1.200	24	2-1571550-8
3	4	4	.175	–	–	.800	1.000	1.150	22	2-1571550-7
3	4	1	.250	–	–	.500	.900	1.000	20	2-1571550-6
3	4	1	.150	–	–	.600	.800	.900	18	2-1571550-5
3	4	1	.150	–	–	.500	.300	.800	16	2-1571550-4
3	4	1	.150	–	–	.400	.600	.700	14	2-1571550-3
3	4	3	.200	–	–	–	.300	.400	8	2-1571550-2
3	4	3	–	–	–	–	.200	.300	6	2-1571550-1
2	3	4	.150	–	–	.900	1.100	1.200	24	1-1571550-3
2	3	2	.150	.500	.900	1.500	1.900	2.000	40	1-1571550-2
2	3	2	.150	.500	.900	1.500	1.700	1.800	36	1-1571550-1
2	3	2	.150	.500	.900	–	1.500	1.600	32	1-1571550-0
2	3	2	.150	.500	.900	–	1.300	1.400	28	1571550-9
2	3	2	.150	.500	.900	–	1.100	1.200	24	1571550-8
2	3	4	.175	–	–	.800	1.000	1.150	22	1571550-7
2	3	1	.250	–	–	.500	.900	1.000	20	1571550-6
2	3	1	.150	–	–	.600	.800	.900	18	1571550-5
2	3	1	.150	–	–	.500	.300	.800	16	1571550-4
2	3	1	.150	–	–	.400	.600	.700	14	1571550-3
2	3	3	.200	–	–	–	.300	.400	8	1571550-2
2	3	3	–	–	–	–	.200	.300	6	1571550-1
FINISH		FIG	F	E	D	C	B	"A" MAX	NO. OF POSN	PART NO.

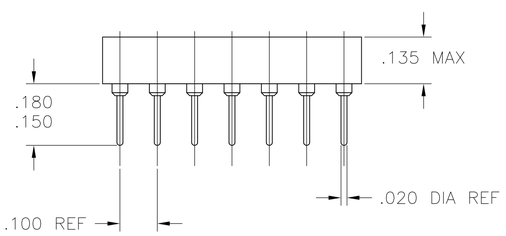

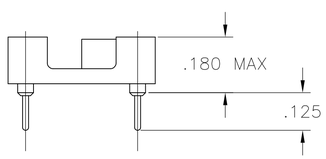

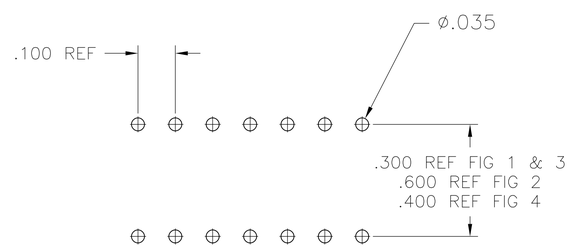

P.C.B. HOLE LAYOUT

TOLERANCE ±.003

THIS DRAWING IS A CONTROLLED DOCUMENT.

DIMENSIONS: INCHES

TOLERANCES UNLESS OTHERWISE SPECIFIED:
0 PLC ± –
1 PLC ± –
2 PLC ± –
3 PLC ± .005
4 PLC ± –
ANGLES ± –

MATERIAL –
FINISH –

DWN T.KRAYBILL 08OCT03
CHK K.WRIGHT –
APVD K.WRIGHT –
PRODUCT SPEC —
APPLICATION SPEC —
WEIGHT —

TE Connectivity

NAME
CLOSED FRAME DIP, PREMIUM LEAD FREE
(REF AUGAT 500 SERIES)
PREMIUM (MACHINED CONTACT)

SIZE	CAGE CODE	DRAWING NO	RESTRICTED TO
A1	00779	C-1571550	—

CUSTOMER DRAWING | SCALE 4:1 | SHEET 1 OF 1 | REV B2

4805 (3/11)