THIS DRAWING IS UNPUBLISHED. RELEASED FOR PUBLICATION -,- .
© COPYRIGHT - By - ALL RIGHTS RESERVED.

LOC	DIST
AF	50

REVISIONS

P	LTR	DESCRIPTION	DATE	DWN	APVD
	D	REVISED PER ECR-12-013518	24NOV12	KH	PD

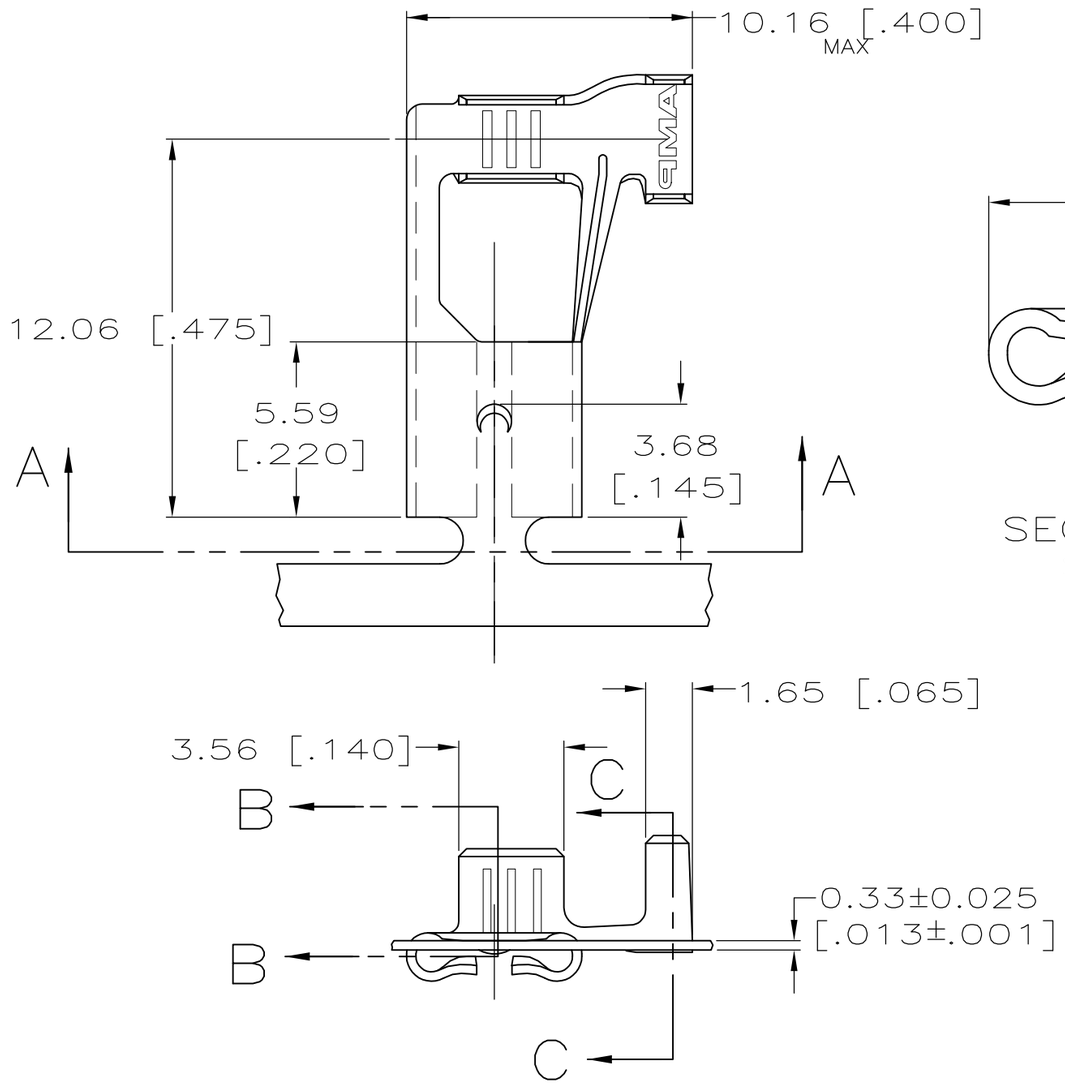

1 CONTINUOUS STRIP ON REELS.

2 ACCEPTS [#20-#16] AWG.

3 INSULATION RANGE 2.28-3.30[.090-.130] DIA.

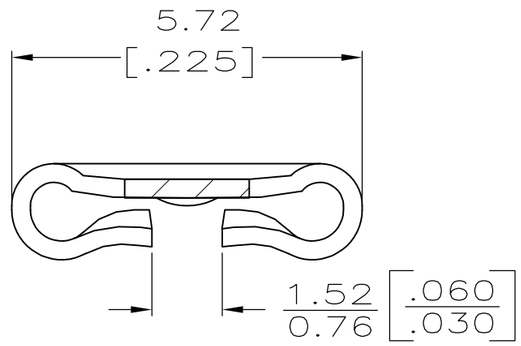

SECTION A-A
SCALE 10:1

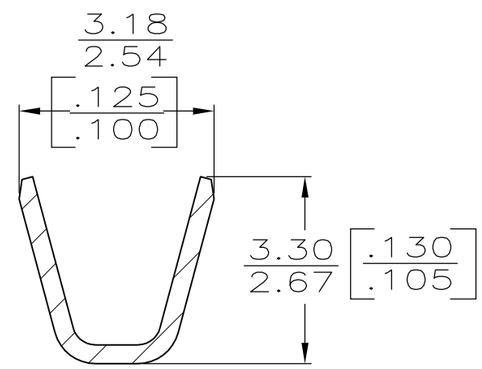

SECTION B-B
SCALE 10:1

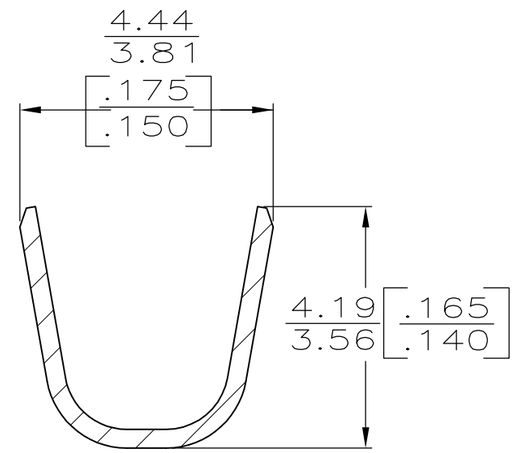

SECTION C-C
SCALE 10:1

TIN	0.81±0.025 [.032±.001]	63848-2
-		63848-1
FINISH	MATING TAB THICKNESS	PART NO

F OR O	3.56 [.140]	4.78 [.188]	F	2.29 [.090]	1.34 [.053]	[#16]
					1.17 [.046]	[#18]
					1.04 [.041]	[#20]
TYPE	WIDTH	STRIP LENGTH ±0.38 [.015]	TYPE	WIDTH	±0.051 [.002] HEIGHT	WIRE
INSUL BARREL CRIMP		WIRE BARREL CRIMP				

THIS DRAWING IS A CONTROLLED DOCUMENT.

DIMENSIONS: mm [INCHES]

TOLERANCES UNLESS OTHERWISE SPECIFIED:

0 PLC	± -
1 PLC	± -
2 PLC	± 0.25 [.010]
3 PLC	± -
4 PLC	± -
ANGLES	± -

MATERIAL: BRASS

FINISH: SEE TABLE

DWN	JR RUTH	5/11/95
CHK	MS FEHER	5/11/95
APVD	P DESANTIS	5/11/95
PRODUCT SPEC	—	
APPLICATION SPEC	114-2079	
WEIGHT	—	

TE Connectivity

NAME: RECEPTACLE, FASTON, FLAG, 4.75 [.187] SERIES

SIZE	CAGE CODE	DRAWING NO	RESTRICTED TO
A3	00779	C-63848	—

CUSTOMER DRAWING | SCALE 5:1 | SHEET 1 OF 1 | REV D