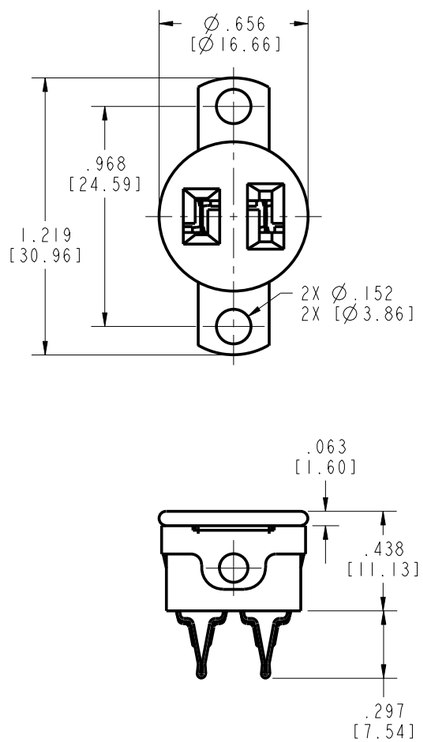

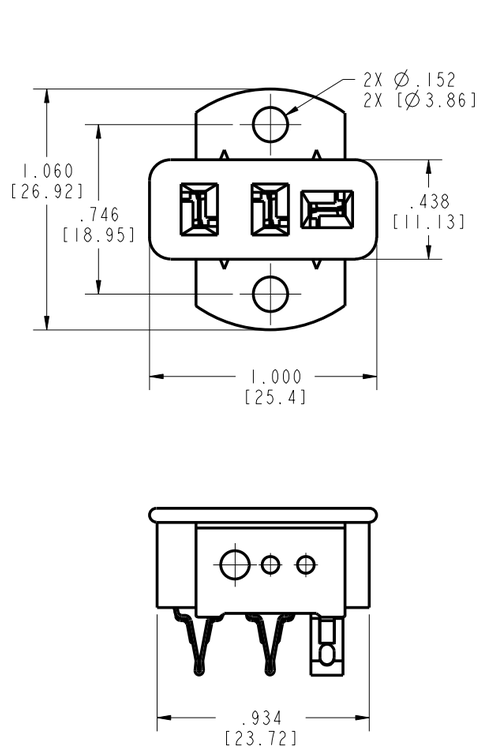

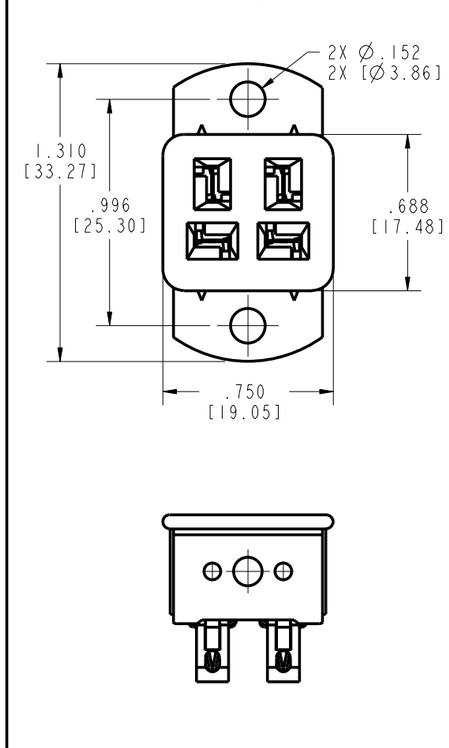

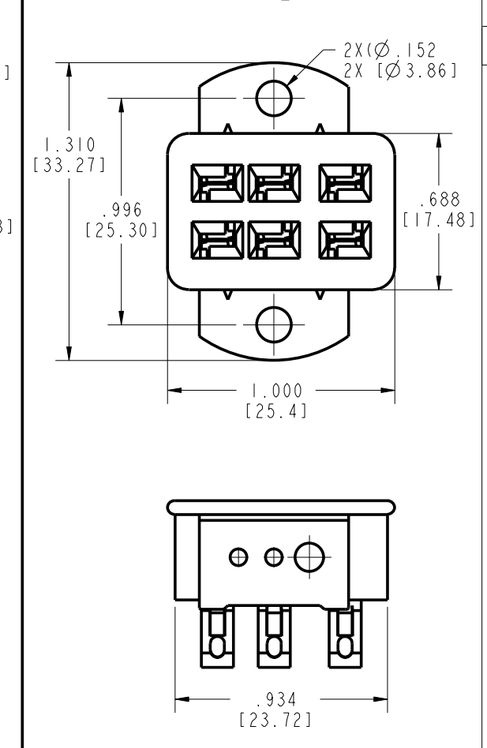

DRAWING REVISIONS			
REV	DOCUMENT	APP	DATE
1	DO 06-1067		

PART NUMBER	TYPE	FACTORY NUMBER
S-302H-AB	1	703 02 02 001
S-303H-AB	2	703 02 03 001
S-304H-AB	3	703 02 04 001
S-306H-AB	4	703 02 06 001

NOTES:

1. SPECIFICATIONS:

   ELECTRICAL:
   OPERATING VOLTAGE: 250 VAC RMS
   CURRENT RATING: 10 AMPS
   CONTACT RESISTANCE: 16 MILLIOHMS MAX

   INSULATOR: GENERAL PURPOSE PHENOLIC, BLACK

   CONTACT: BRASS, MATTE TIN

   BRACKET, DRIVE PIN: STEEL, ZINC WITH CLEAR TRAIVALENT CHROMATE

   ENVIRONMENTAL:
   OPERATING TEMPERATURE: UP TO +105°C

   TERMINATION: SOLDER

2. DIMENSIONS IN [ ] ARE IN MILLIMERTERS

3. ALL DIMENSIONS ARE REFERENCE

RoHS COMPLIANT

UNITS ENGLISH INCHES

PRO/E

DO NOT SCALE DRAWING

UNLESS OTHERWISE SPECIFIED:
ALL DIMENSIONS ARE IN INCHES
FILLET/RADII .02 MAX
TOLERANCES
.X ± .1
.XX ± .01
.XXX ± .005
ANGULAR ± .5°

THIS DOCUMENT IS THE PROPERTY OF CINCH. NEITHER THIS DOCUMENT NOR ANY OF THE INFORMATION CONTAINED IN IT MAY BE DUPLICATED OR DISCLOSED WITHOUT PRIOR WRITTEN CONSENT OF CINCH.

DRAWN BY: JIMENEZ	DATE: 6/20/06	TITLE: SOCKET ASSEMBLY, ANGLE BRACKET	
DESIGN ENGINEER: A. BALI	6/20/06	MATERIAL	CONTROL SPEC NUMBER: 06-1067
DESIGN ENGINEERING MGR.		MATERIAL SPEC NUMBER / FINISH	PROJECT NUMBER: C14789-1
MFG. ENGINEERING		CAD FILE NUMBER: S302HAB	DRAWING NUMBER: S-302H-AB
QUALITY ASSURANCE		CAGE IDENT NO.: 71785 / SIZE: B	SCALE: 1.000 / SHEET 1 OF 1

Cinch

MODELED BY: JIMENEZ
1700 FINLEY RD
LOMBARD, IL. 60148