PRODUCT NUMBER
10087120–YXXLF

LATCHING
0= WITHOUT LATCH
1= STANDARD LATCH
2= LOW PROFILE LATCH

INDICATES THE PRODUCT IS RoHS COMPATIBLE, SEE NOTE 9

PIN STYLE	SIZE
06	2x3
08	2x4
10	2x5
14	2x7
16	2x8
18	2x9
20	2x10
26	2x13
30	2x15
34	2x17
40	2x20
44	2x22
50	2x25
60	2x30
64	2x32

PLATING :
0.05µm Au FULL PLATED
OVER 1.27µm Ni MIN

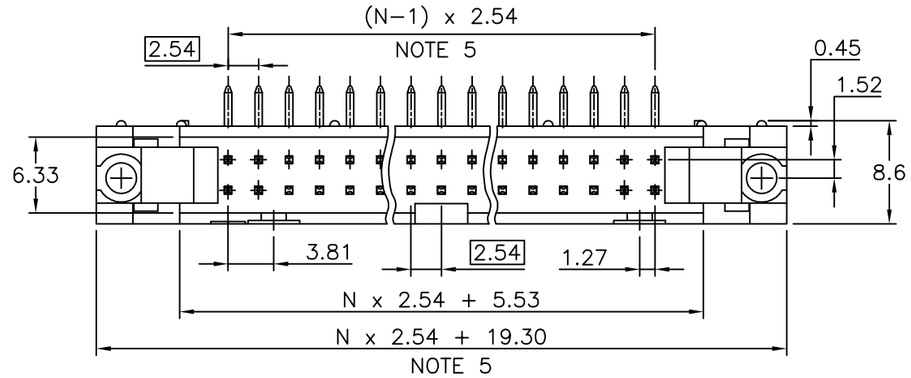

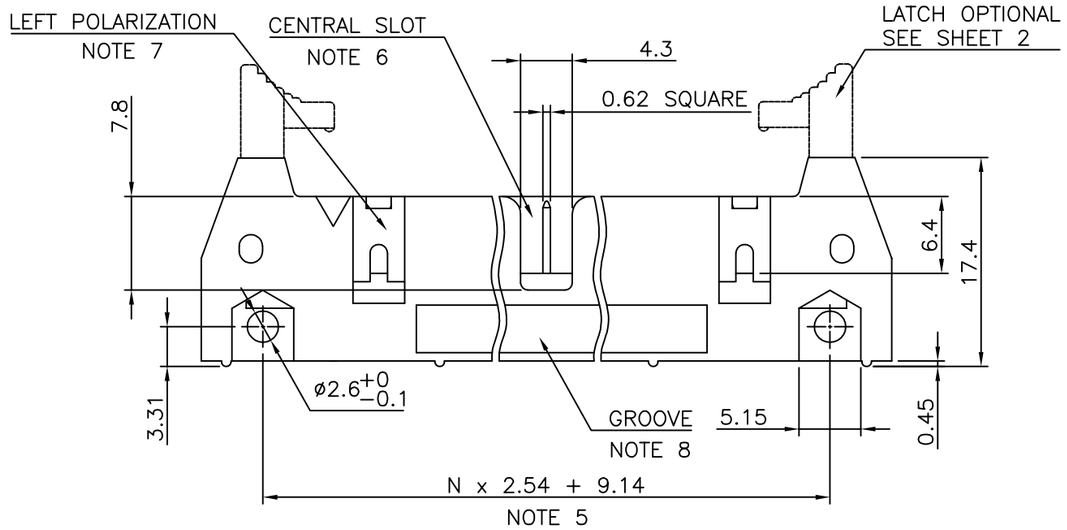

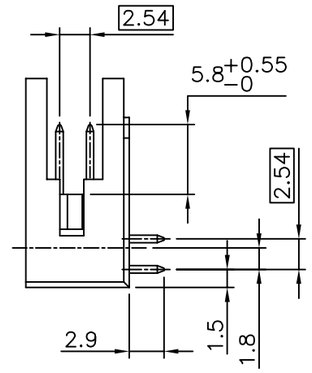

NOTES:

1 – HOUSING MAT'L : GLASS FILLED THERMOPLASTIC. UL94V–0 COLOR: GREY

2 – PIN MATERIAL : BRASS

3 – PRODUCT PACKAGED IN TUBES

4 – 40N MIN LATCH RETENTION FORCE AT FIRST EXTRACTION

5 – TO DETERMINE DIMENSIONS :
N = NUMBER OF POSITIONS PER ROW
EXAMPLE : 8 POS N x 2.54 = 20.32mm

6 – NO CENTRAL SLOT ON POSITIONS 6 & 8

7 – NO LEFT POLARIZATION ON POSITIONS 06, 08, 10, 14.

8 – NO GROOVE ON POSITIONS 06, 08, 10, 14, 30, 34

9 – RoHS COMPATIBLE PRODUCT SPECIFICATIONS

a – PLATING:
– "LF" MEANS THE PRODUCT IS LEAD–FREE, 2µm MINIMUM MATTE TIN OVER 1.27µm MINIMUM NICKEL UNDERPLATE.

b – MANUFACTURING PROCESS COMPATIBILITY
– THE HOUSING WILL WITHSTAND EXPOSURE TO 260°C ±5°C SOLDER BATH TEMPERATURE FOR 5 SECONDS IN A WAVE SOLDER APPLICATION WITH A 1.6mm MIN THICK CIRCUIT BOARD.

c – LABELING:
– MEETS PACKAGING SPECS AS PER GS–14–920

d – LEGAL STATEMENT: SEE GS–22–008.

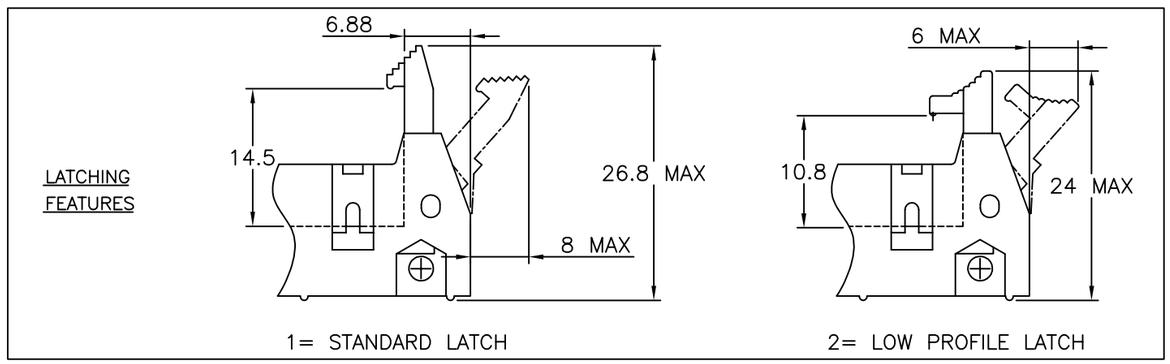

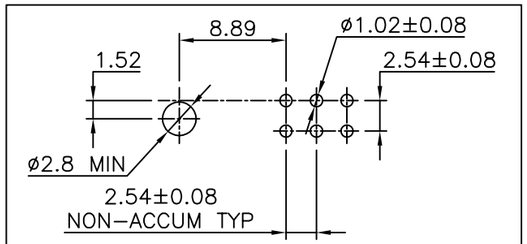

RECOMMENDED HOLE PATTERN

mat'l. code				surface ISO 1302	tolerance ISO 406 ISO 1101		projection	product family
								QUICKIE
ltr	ecn no	dr	date	tolerances unless otherwise specified				title
A	F08–0149	LMU	08.03.27	angles	linear	.X ±0.3	mm	QKIE HEADER
						.XX ±0.13		RA 0.05µm Au
						.XXX ±0.05	scale 2:1	
				dr	J.COMPAGNON	08.03.07		dwg no / sheet 1 of 1 / size
				engr	L.MULIN	08.03.07		10087120 / A3
				chr				
				appd	L.MULIN	08.03.07		type CUSTOMER Drawing
sheet index	revision sheet							

FCIconnect.com
Copyright FCI