ITT

Electronic Components

Cannon CA-Bayonet Connectors

In Accordance with VG95234

Engineered for life

Interconnect Technologies & Solutions

For over 90 years, ITT has been developing innovative solutions for harsh environment applications. We have a proven track record of demonstrating our expertise and commitment to the industrial industry, offering the broadest portfolio of interconnect products.

Our interconnect range include sealed circulars, plastic and metal shell bayonet coupling circulars, miniature metal shell circulars, PC board header connectors and sensor and direct device connectors. ITT is also a systems supplier, providing value-added module and harness assemblies.

In addition to our CA Bayonet series, we also offer these connectivity solutions:

Environmentally Sealed

Cannon MIL-DTL-38999

High density contact arrangements, corrosion-resistant shells, rear release crimp snap-in contacts, operates under severe high temperature vibration testing.

Cannon Trident

Versatile range of electrical connectors based on a standard contact design. Options include; industrial grade, harsh environment and shielded circulars.

Harsh Environments

Cannon KPT / KPSE

Environmentally sealed miniature circular connectors available in two versions: KPT (solder contact) and KPSE (high performance crimp contact). Intermateable and intermountable with all MIL-C-26482 connectors and is available with many materials, finishes and configurations.

Table of Contents

Introduction 3
Technical Data 4-5
Mounting Dimensions 6-7
How to Order 8
Contact Arrangements 10
Connector Dimensions 28
Coupling Dimensions 43
Accessories 44
Contacts 50
Product Safety Information 54

ITT logo blocks and the composite ITT logo are registered trademark of ITT Industries. ©2005

ITT

Introduction

Cannon CA-Bayonet series was designed in accordance with the VG95234 specification. This versatile and highly reliable connector series is an improvement on the well established MIL-C-5015 series. CA-Bayonet has a proven bayonet coupling design that offers exceptional vibration protected sealing against fluids, and easy connection/disconnection.

Initially designed for aircraft and airborne applications, these rugged connectors are used in the electrical equipment of trucks, off-road vehicles, ships, earth-moving equipment, telecommunications and others.

Connectors in accordance with VG95234 are interchangeable with the corresponding MIL-C-5015 connectors. Both connector lines feature the same shell dimensions and contacts layouts. However, due to the different coupling systems (MIL-C-5015 threaded coupling, VG95234 bayonet coupling) they are not intermateable.

Advantages

– rugged shell design
– environmental
– bayonet coupling for easy mating and unmating
– vibration proof
– waterproof up to 1 bar (35 feet of water)

Cannon has the complete VG95234 program available and, in addition, many other types which exceed the requirements of VG95234 and MIL-C-5015.

Attention:
Metal shell connectors which may be touched are not suitable for mains power. See page 54 for Product Safety Information, para. 5.

* European Community “Old Car” directive (2000/53/EG)
* European Community Waste Electrical and Electronic Equipment (WEEE) 2000/0158
* European Community restrictions of use of certain hazardous substances in WEEE (ROS) (2000/0159)

Connector Design

Due to the rugged shell made of an aluminium alloy, these connectors withstand most severe conditions. Olive drab chromate coating over cadmium plating protects the surface of the shell.

Cannon offers zinc cobalt plating as an alternative to customers who refuse cadmium plating and also as a general improvement of the zinc plating.

The insulators are made of high quality polychloroprene and withstand temperatures from -67°/+257°F (-55/125°C). This material is self-extinguishing, resistant against hydraulic fluids, jet fuel, diesel fuel, gasolines, lubricants, brake and fire extinguisher fluids.

The contacts are made of copper alloy plated with a hard silver finish guarantee at least 500 mating cycles.

All solder contacts feature a special passivation to comply with ROHS requirements. The crimp contacts allow highly reliable crimping with wires according to TL 6145-009, TL 6145-011 and MIL-W-5086 when using the recommended tools according to VG95234. Crimp contacts can be exchanged at least five times due to the contact retention.

The insulators are made of high quality polychloroprene and withstand temperatures from -67°/+257°F (-55/125°C). This material is self-extinguishing, resistant against hydraulic fluids, The bayonet design allows fast and easy coupling and uncoupling. An audible control by metallic sound and visual control by colour-marked snap-in position offer additional coupling security.

VG connectors are basically designed for single wire harnessing. For full environmental sealing each conductor is sealed completely within the grommet. Under certain conditions, jacketed cables can be used for the shell styles E, G, M and N.

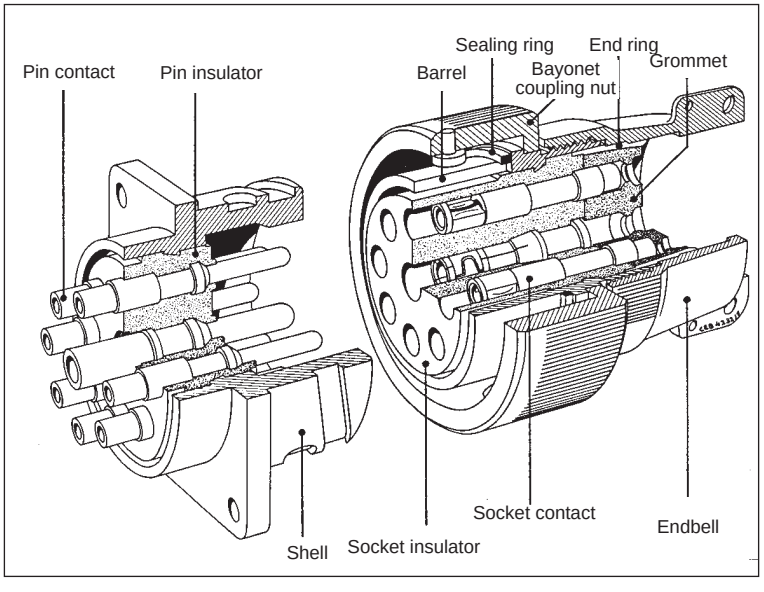

Electrical Data

Contact rating at 68 °F (+20 °C)

Contact size	max. current A
10	8
16S/15S	22
16/15	22
12/25	41
8/60/100	74
4/160	135
0/500	245

Current rating
depending on ambient temperature

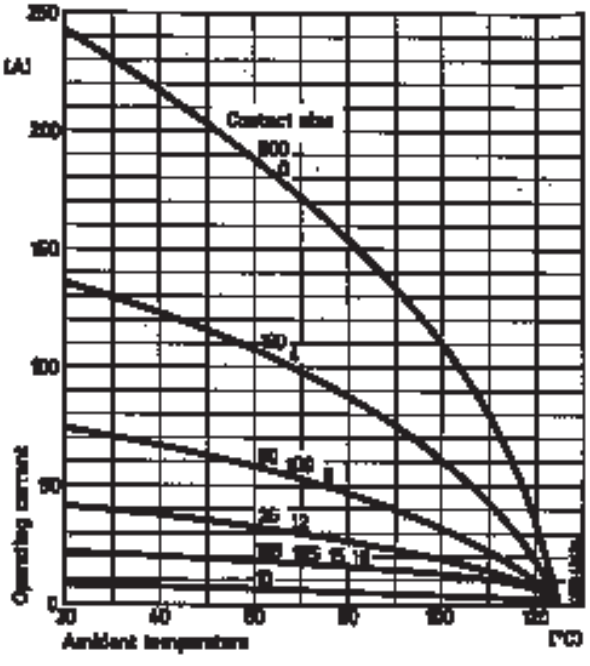

Operating voltage and connector usage

Connectors in equipments must not be separated or mated under load when used per specifications.

As according to specification the connectors are suitable for an operating voltage of 50 V (see Product Safety Information). However, this is only valid, when the connectors are freely accessible during operation and consequently might be touchable. When the connectors will be operated with line voltage, please contact ITT Customer Service.

Contact resistance
(Millivolt test)

The contact resistance has to be tested according to VG95234 part 2, test no. 5.10.1 and VG 95210, part 37. The measuring points are indicated in the illustration.

Contact size metric	AWG	Max. contact resistance mΩ
10	–	12
15S/15	16S/16	6
25	12	3
60/100	8	1
160	4	0,5
500	0	0,2

Insulation resistance
Acc. to VG95319, part 2, test no. 5.12 and VG95210, part 32, test condition B

Standard insulator material	> 1000 MΩ
FKM insulator material (upon request)	> 5000 MΩ

Test voltage
Acc. to VG95319, part 2, test no. 5.13 and VG 95210, part 31
Test voltage for service rating:

Service rating	Test voltage V_{rms}
Instruments	1050
A	1600
B	4000
D	2500
E	3000

Air and creepage paths (min.)

Voltage class	Instr.	A	D	E
Air and creepage paths mm	0,7	1,1	2,8	4,8

Mechanical Features

Ambient temperature
Standard insulator material
–55°/125°C (–67/257°F)

FKM insulator material*
–30°/200°C (–22/392°F)

Safety provisions**
IP 67 acc. to DIN 40 050
(1 bar pressure after 12 hrs.)

Vibration test
200 m/s^2 at 10 to 2000 Hz

Mating cycles
500 min.

Separating force per contact.
The corresponding separating force has to be measured according to VG95319, part 2, test no. 5.7. using the required test gage.

Contact size metric	AWG	Separating force min. N	Gage
10	–	0,3	G 0,99
15S/15	16S/16	1,0	G 1,56
25	12	1,5	G 2,36
60/100	8	3,0	G 3,58
160	4	4,0	G 5,69
500	0	8,5	G 9,04

Gage
(see also VG 95234, Part 1)

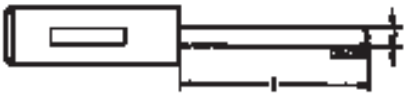

Gage	Contact diameter d +0,01	L –1
G 0,99	0,99	7
G 1,56	1,56	9
G 2,36	2,36	12
G 3,58	3,58	13
G 5,69	5,69	13
G 9,04	9,04	13

Coupling torque

The allowable coupling torques have to be tested under full bundle conditions of the connectors to VG95319, part 2, test no. 5.8.2.

Shell size	Allowable coupling torque closing and opening Nm max.	Opening Nm min.
10SL	1,7	0,15
12S	2,5	0,23
14S	3,6	0,35
16S/16	5,5	0,46
18	8	0,58
20	9	0,7
22	11	0,8
24	14	0,8
28	17	0,92
32	19	1,03
36	23	1,03

Contact retention

The contact retention has to be tested according to VG95319, part 2, test no. 5.4. Test force direction = Mating direction.

Contact size	AWG	Test force N
10	–	30
15S/15	16S/16	35
25	12	55
60/100	8	80
160	4	90
500	0	95

Materials

Shell	Aluminum alloy
Standard finish	Olive drab chromate coating over cadmium plating
Alternative finish	Zinc cobalt (see page 9 – Modification)
Insulator and grommets	Polychloroprene (Standard) FKM (High temperature)*
Contacts	Copper alloy
Standard finish	Hard silver
Special finish	A176 nickel and hard gold plating

* upon request

** **Longitudinal sealing:** The connector is not sealed against fluids entering through the cable, as the sealing lips of the single wire sealing are pressing against the jacket of the individual cables.

Dimensions shown in mm
Specifications and dimensions subject to change

Mounting Holes

Mounting holes for wall mounting receptacles style A, B1, B2, C1, C2, J1, J2, N1 and N2 acc. to VG95234, or CA 3100E/F/R-B and CA 3102 E-B.

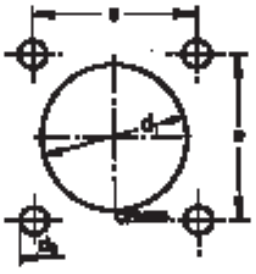

Shell size	ø d1H12 Style A CA 3102E-B	Style B1, B2 C1, C2, J1, J2 N1, N2 CA 3100E, F, R-B TBF-B/-05	ø d2H13 Style A, B2, C2, J2, N2 CA-B Mod-05	Style B1, C1, J1, N1 CA 3100E, F, R-B	e ±0,15	screws to be used A, B2, C2, J2, N2 CA-B-Mod. 05	B1, C1, J1, N CA 3100E, F
10SL	16,4	18,5	3,4	4,5	18,2	M3...DIN 85	M4...DIN 84
12S	16,4	21,7	3,4	4,5	20,6	M3...DIN 85	M4...DIN 84
14S	19,7	24,9	3,4	4,5	23,0	M3...DIN 85	M4...DIN 84
16S	22,9	27,7	3,4	4,5	24,6	M3...DIN 85	M4...DIN 84
16	22,9	27,7	3,4	4,5	24,6	M3...DIN 85	M4...DIN 84
18	26,1	31,1	3,4	4,5	27,0	M3...DIN 85	M4...DIN 84
20	29,5	34,5	3,4	4,5	29,4	M3...DIN 85	M4...DIN 84
22	32,7	37,8	3,4	4,5	31,8	M3...DIN 85	M4...DIN 84
24	36,0	41,3	3,9	4,5	34,9	M3,5...DIN 85	M4...DIN 84
28	42,0	47,1	3,9	5,5	39,7	M3,5...DIN 85	M5...DIN 84
32	48,3	53,8	4,5	5,5	44,5	M4...DIN 85	M5...DIN 84
36	54,6	60,0	4,5	5,5	49,2	M4...DIN 85	M5...DIN 84

* When used with safety elements the max. outer diameter must not exceed the outer diameter of the screw head.

Harnessing

VG95234 connectors are designed for single wire harnessing. Full sealing will be guaranteed only by using wires in accordance with MIL-W-5086, LN 9251 (for AWG) and TL 6145-009 and TL 6145-011 (for metric wires). All other wires have to conform to wire and insulation diameters with the data given in the following table:

Contact size AWG	metric mm	Crimp- and solder contacts AWG	metric mm^2	Insulation Ø AWG	metric mm
–	10	–	0,75-1,0	–	1,45-2,5
16S/15S	16/15	16	0,75-1,5	1,6-2,8	1,60-2,8
12	25	12	2,5	2,9-3,5	2,9-3,5
–	60	–	6,0	–	3,5-4,9
8	100	8	10,0	4,2-5,8	5,5-6,5
4	160	4	16,0	6,2-9,0	7,1-9,0
0	500	0	50,0	10,5-13,0	10,5-13,0

Wire Stripping

Either mechanical or hot stripping can be used. Prevent conductor or insulator damage. For solder contacts, conductors have to be pretinned.

Note: Do not twist conductors used with crimp contacts. Do not touch uninsulated conductors before crimping. Twisting of conductors and grease or lubricants on the wires cause poor crimp quality.

Contact size AWG	metric	Stripping length mm
–	10	4,0 + 0,4
16S/15S	16/15	6,0 + 0,5
12	25	6,0 + 0,5
8	60/100	11,0 + 0,8 – 0,4
4	160	11,0 + 0,8 – 0,4
0	500	13,0 + 0,8 – 0,4

Separating and Mounting Dimensions

When using connectors according to VG 95234 the below mentioned installation dimensions have to be met.

Connector style D
or
CA3106E-B and
CA3106F-B
CA3106F-B-13/-14/-15

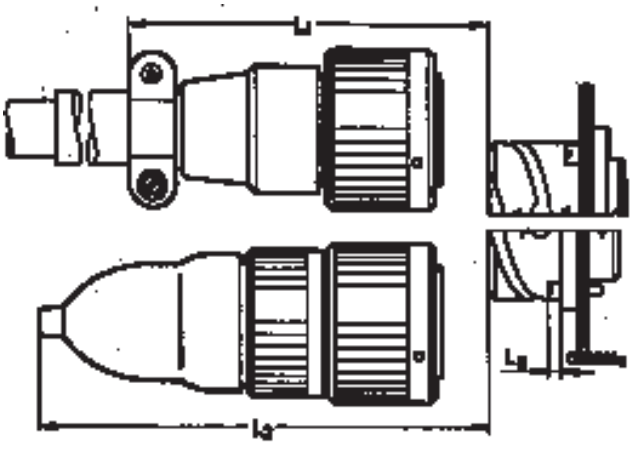

Connector style G, M, R1
or
CA3106E-B-02/-03/-06
CA3106E-B-13/-14/-15 and
CA3106E-B-32
with shrink boot, straight,
acc. VG95343

Connector style E, E1 and K
or
CA3108E/F-B and
CA3108F-B-13/-14/-15

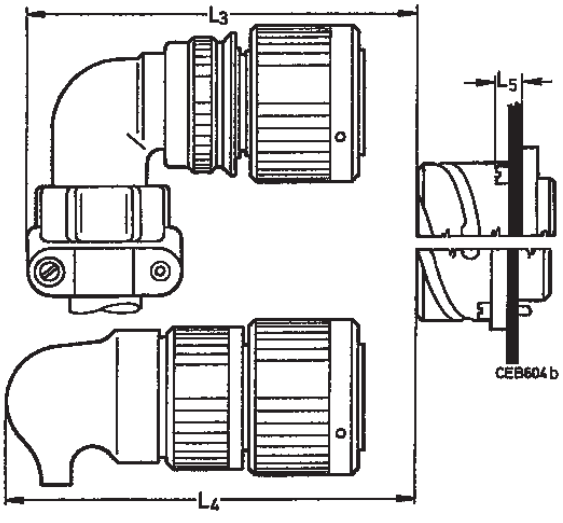

Connector style G, M, R1
or
CA3106E-B-02/-03/-06
CA3106E-B-32
with shrink boot 90°
acc. to VG 95343

Shell Size	L1 (D) min.	L2 (G/M) min.	L3 min.	L4 (G/M) min.	L4 R1 +10 mm	L5 max.	L6 max.
10SL	70	70	70	65	75	8,0	3,5
12S	70	75	75	70	80	8,0	3,5
14S	70	75	75	70	80	8,0	3,5
16S	70	90	80	80	90	8,0	3,5
16	80	100	90	90	100	6,5	3,5
18	90	100	90	90	100	8,0	3,5
20	90	100	95	100	110	8,0	3,5
22	90	100	95	100	110	8,0	3,5
24	110	120	105	110	120	8,0	5,0
28	110	120	105	110	120	9,0	5,0
32	110	180	115	120	130	9,0	6,0
36	110	190	120	130	140	9,0	6,0

Dimensions shown in mm
Specifications and dimensions subject to change

How to order
VG Order reference

VG 95234 A – 32 – 6 S 1 N

- **Series** — VG 95234
- **Shell style** — A
- **Dash** — –
- **Shell size** — 32
- **Contact arrangement** — 6
- **Contact type** — S
- **Contact termination** — 1
- **Insulator position** — N

Explanation

Series	VG 95234
Shell style	J1, J2, N1, N2, S1, U1, U2 – wall mounting receptacle F – cable connection plug A, B1, B2 – box mounting receptacle C1, C2 – bulkhead receptacle D, G, H, L, M, R1 – straight plug E, E1, K – plug 90°
Shell size	10SL, 14S, 16S, 16, 18, 20, 22, 24, 28, 32 and 36
Contact arrangement	see page 10
Contact type	P – Pin contact S – Socket contact
Contact termination	without identification – contacts for metric wire sizes identification 1* – contact for AWG wire sizes
Insulator position	see page 24

Accessories acc. to VG

Dummy receptacles	VG95234 BOD
Gaskets, front mount	VG95234 DA
Gaskets, rear mount	VG95234 DH
Protecting caps	VG95234 KR
Protecting caps	VG95234 KB
Cabel caps	VG95234 KK
Bushing	VG95234 KT

* Only valid for layout within the VG95234.

Layout list permitting identification 1:

Layout	Page Number
22-2	15
24- 11	16
24-12	17
28-22	19
32-1	19
32-6	20
36-3	21
36-5	21
36-6	21

How to order
Cannon Order reference

CA 3106 E 18 – 1 S X B – ***

- **Series** — CA
- **Shell style** — 3106
- **Class** — E
- **Shell size** — 18
- **Contact arrangement** — 1
- **Contact type** — S
- **Insulator position** — X
- **Connectors with bayonet coupling** — B
- **Dash** — –
- **Modification** — ***

Explanation

Series	CA – Circular connectors with bayonet coupling
Shell style	3100 – Wall mounting receptacle 3101 – Cable connecting plug 3102 – Box mounting receptacle 3105 – Dummy receptacle for front and panel mounting 3106 – Plug, straight 3108 – Plug, 90° TBF – Bulkhead receptacle
Class	E – environmental with resilient insulators and endbell with clamp and bushing F – environmental with resilient insulator and endbell for flex tube R – environmental with resilient insulator and shortened light-weight endbell without cable clamp
Shell size	10SL, 12S, 14S, 16S, 16, 18, 20, 22, 24, 28, 32 and 36
Contact arrangement	see page 10
Contact type	P – Pin S – Socket PS – one side pin, one side socket (only for TBF)
Insulator position	Besides the normal position further insulator positions are possible for Cannon connectors (see page 24) to prevent mismating. Polarization is achieved by turning the pin contact insulator clockwise towards the shell, the socket insulator, however, in opposite clockwise direction. This information refers to the mating side of the contact insulator. For special insert alternations of standard inserts see page 25.
Modification	see next page

Modification
(only for CA.....-B)

01	– metric crimp contacts
02	– adapter for heat shrink boots AWG crimp contacts
03	– adapter for heat shrink boots, metric contacts
04	– rear mount, thread in flange, metric crimp contacts
05	– trear mount, through holes in flange, (CA3100, CA 3102, CA 20, TBF)
06	– shrink boot adapter, thread holes in flange, solder pot contacts
08	– angular endbell, through holes in flange (for CA3100 only)
09	– angular endbell, through holes in flange (for CA3100 only)
13	– shielded version, solder contacts
14	– shielded version, metric crimp contacts
15	– shielded version, AWG crimp contacts
41	– shielded version, heat shrink boot adapter
32	– endbell for shielded system cable acc. MTV 6145-005
109	– F80, rear mount, thread holes in flange (for CA3100 only)
111	– rear mount, thread holes (CA3102 only), solder contacts
F80	– AWG crimp contacts
A232	– Zinc cobalt black
A233	– Zinc cobalt green
F42	– less grommet and backshell
F0	– less contacts, contacts to be ordered separately see pages 51– 52

Important!

When connectors are requested according to VG 95234 modification, e.g. with another finish, with other contact arrangements and solder contacts, they are to be ordered only with the ITT Cannon order reference.

Connectors acc. to VG95234 are generally available with insert positions X and Y only.

VG order reference with modification is not possible.

With Spring Washer and Friction Ring

These connectors feature a spring washer and a friction ring under the coupling nut.

Advantage	Vibrations are being compensated
Ordering example	according performance class insert „W“ after Class E, F or R
CA06EW	– connector with spring washer, endbell with cable and bushing
CA06FW	– connector with spring washer, endbell for flex tube
CA06RW	– connector with spring washer and short endbell
CA08EW/FW	– connector with spring washer and 90° endbell

The connectors acc. to **VG95234** are generally delivered **with spring washer**.

Other Shell Styles

CA3100E-B-02/03/06	– adapter for heat shrink boot
CA3100F-B-08/09	– 90° endbell for flex tube
CA3100E-B-08/09	– 90° endbell, cable clamp and bushing
CA06PG-B	– PG adapter
CA3101F-B-08/09	– 90° endbell flex tube
CA02L-B	– receptacle with pcb solder contacts
CA20L-B	– rear mount receptacle with pcb solder contacts
CA07A-B	– jam nut receptacle
CA00EP-B-TL	– TINEL-LOCK adapter
CA06EW-B-TLXX	– TINEL-LOCK adapter

View on Mating face of Pin Insulator	No. of Contacts	**Contact arrangement** Contact size VG	CA	Service rating	Insulator position N	V	W	X	Y	Z	Position	Special polarization	Insulator weight (g) including contacts pin	socket
	3	**10SL-3** 15S	**10SL-3** 16S	– A	0	–	–	–	–	–	–	–	6	9
	2	**10SL-4** 15S	**10SL-4** 16S	A	0	–	–	–	–	–	–	–	4	6
▲	2	–	**12S-3** 16S	A	0	100	70	145	215	290	–	–	4	6
	1	–	**12S-4** 16S	D	0	–	–	–	–	–	3	110	3	4,5
	4	–	**12SA10** 16S	Instr.	0	–	–	–	–	–	3 8	110 250	6	8
	3	–	**14S-1** 16S	A	0	–	–	–	–	–	–	–	6	9
	4	–	**14S-2** 16S	Instr.	0	–	–	120	240	–	–	–	7	11
	1	–	**14S-4** 16S	D	0	–	–	–	–	–	–	–	4	7
	5	–	**14S-5** 16S	Instr.	0	–	–	110	–	–	–	–	9	13
	6	**14S-6** 15S	**14S-6** 16S	Instr.	0	–	–	–	–	–	–	–	11	15
▲	3	–	**14S-7** 16S	A	0	–	90	180	270	–		–	6	9
	2	–	**14S-9** 16S	Instr.	0	–	70	145	215	290	–	–	5	18
	7	–	**14SA7** 16S	Instr.	0	–	–	–	–	–	–	–	10	15
▲	7	**16S-1** 15S	**16S-1** 16S	A	0	–	80	–	–	280	–	–	14	19
	2	**16S-4** 15S	**16S-4** 16S	D	0	–	35	110	250	325	–	–	7	10
▲	3	–	**16S-5** 16S	A	0	–	70	145	215	290	–	–	8	12
	5	–	**16S-8** 16S	A	0	–	–	170	265	–	–	–	10	15

▲ Attention: for all alternate positions of these contact arrangements a tendency to overmate can be stated. It is within the customer's responsibility to use these insert positions.

View on Mating face of Pin Insulator	No. of Contacts	**Contact arrangement** Contact size VG	CA	Service rating	Insulator position N	V	W	X	Y	Z	Position	Special polarization	Insulator weight (g) including contacts pin	socket
	3 2 1	**16-7** 15 100	**16-7** 16 8	A	0	–	80	110	250	280	–	–	16	25
	4 2 2	–	**16-9** 12 16	A	0	–	35	110	250	325	–	–	13	20
▲	3	**16-10** 25	**16-10** 12	A	0	–	90	180	270	–	–	–	17	24
	2	–	**16-11** 12	A	0	–	35	110	250	325	–	–	11	17
	1	**16-12** 160	**16-12** 4	A	0	–	–	–	–	–	–	–	24	28
	2	**16A11** 25 (socket) 25A (pin)	**16A11** 12	A	0	–	35	110	250	325	–	–	11	17
▲	10	**18-1** 15	**18-1** 16	A (B, C, F, G) Instr. (all others)	0	–	70	145	–	290	–	–	24	37
	2	–	**18-3** 12	D	0	–	35	110	250	325	–	–	13	22
	4	–	**18-4** 16	D	0	–	35	110	250	325	–	–	19	30
	3 2 1	–	**18-5** 12 16	D	0	–	80	110	250	280	–	–	15	25
	1	–	**18-6** 4	D	0	–	–	–	–	–	–	–	24	32
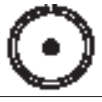	1	–	**18-7** 8	D	0	–	–	–	–	–	–	–	16	25
	8 1 7	–	**18-8** 12 16	A	0	–	70	–	–	290	–	–	18	30
	7 2 5	–	**18-9** 12 16	Instr.	0	–	80	110	250	280	–	–	18	30
	4	–	**18-10** 12	A	0	–	–	120	240	–	–	–	13	22
	5	**18-11** 25	**18-11** 12	A	0	–	–	170	265	–	–	–	31	40

▲ Attention: for all alternate positions of these contact arrangements a tendency to overmate can be stated. It is within the customer's responsibility to use these insert positions.

Dimensions shown in mm
Specifications and dimensions subject to change

Cannon VG/CA-Bayonet

View on Mating face of Pin Insulator	No. of Contacts	**Contact arrangement** Contact size VG	CA	Service rating	Insulator position N	V	W	X	Y	Z	Position	Special polarization	Insulator weight (g) including contacts pin	socket
	6	–	**18-12** 16	A	0	–	80	–	–	280	–	–	15	25
▲	4 1 3	**18-13** 60 25	**18-13** 8 12	A	0	–	80	110	250	280	–	–	15	24
	7 2 5	–	**18-17** 12 16	Instr.	0	–	–	–	–	–	12	100	15	23
	10	–	**18-19** 16	A	0	–	–	120	240	–	–	–	19	31
	5	–	**18-20** 16	A	0	–	90	180	270		–	–	15	25
	3	–	**18-21** 12	A	0	–	–	–	–	–	–	–	17	28
	3	–	**18-22** 16	D	0	–	70	145	215	290	–	–	10	20
	1	**20-2** 500	**20-2** 0	D	0	–	–	–	–	–	–	–	46	55
	3	–	**20-3** 12	D	0	–	70	145	215	290	–	–	28	42
	4	–	**20-4** 12	D	0	–	45	110	250	–	–	–	24	40
	3	–	**20-6** 16	D	0	–	–	–	–	–	–	–	22	36
	8	–	**20-7** 16	A (C, D, E, F) D (A, B, H, G)	0	–	80	110	250	280	–	–	28	42
	6 2 4	**20-8** 100 15	**20-8** 8 16	Instr.	0	–	80	110	250	280	–	–	37	49
	13	–	**20-11** 16	Instr.	0	–	–	–	–	–	–	–	25	41

▲ Attention: for all alternate positions of these contact arrangements a tendency to overmate can be stated. It is within the customer's responsibility to use these insert positions.

View on Mating face of Pin Insulator	No. of Contacts	**Contact arrangement** Contact size VG	CA	Service rating	Insulator position N	V	W	X	Y	Z	Position	Special polarization	Insulator weight (g) including contacts pin	socket
	5 3 2	– –	**20-14** 12 8	A	0	–	80	110	250	280	–	–	22	39
	7	–	**20-15** 12	A	0	–	80	–	–	280	–	–	27	46
	9 2 7	–	**20-16** 12 16	A	0	–	80	110	250	280	–	–	19	32
	6 5 1	–	**20-17** 12 16	A	0	–	90	180	270	–	–	–	20	33
	9 3 6	–	**20-18** 12 16	A	–	–	35	110	250	325	–	–	19	32
	3	–	**20-19** 8	A	0	–	90	180	270	–	–	–	33	46
	6 3 3	–	**20-22** 8 16	A	–	–	80	110	250	280	–	–	37	49
	2	–	**20-23** 8	A	–	–	35	110	250	325	–	–	25	35
	4 2 2	–	**20-24** 8 16	A	0	–	35	110	250	325	–	–	40	53
	14	–	**20-27** 16	A	0	–	35	110	250	325	–	–	26	42
	17	–	**20-29** 16	A	0	–	80	–	–	280	–	–	29	47

▲ Attention: for all alternate positions of these contact arrangements a tendency to overmate can be stated. It is within the customer's responsibility to use these insert positions.

Dimensions shown in mm
Specifications and dimensions subject to change

View on Mating face of Pin Insulator	No. of Contacts	**Contact arrangement** Contact size VG	CA	Service rating	Insulator position N	V	W	X	Y	Z	Position	Special polarization	Insulator weight (g) including contacts pin	socket
	11	–	**20-33** 16	A	0	–	–	–	–	2 3 17	260 110 130	–	23	38
	9	**20A9** 25	**20A9** 12	D (J) Instr. (all others)	0	–	–	110	250	–	–	–	21	35
	19	**20A48** 15	**20A48** 16	Instr.	0	–	–	80	280	–	–	–	30	50
	2	–	**22-1** 8	D	0	–	35	110	250	325	–	–	28	42
	3	**22-2** 8	**22-2** 8	D	0	–	70	145	215	290	–	–	35	50
	4 2 2	–	**22-4** 8 12	A	–	–	35	110	250	325	–	–	34	48
	6 2 4	–	**22-5** 12 16	D	–	–	35	110	250	325	–	–	23	38
	1	–	**22-7** 0	E	0	–	–	–	–	–	–	–	45	57
	2	– –	**22-8** 12	E	–	–	35	110	250	325	–	–	18	28
	3	– –	**22-9** 12	E	0	–	70	145	215	290	–	–	21	32

▲ Attention: for all alternate positions of these contact arrangements a tendency to overmate can be stated. It is within the customer's responsibility to use these insert positions.

View on Mating face of Pin Insulator	No. of Contacts	**Contact arrangement** Contact size VG	CA	Service rating	Insulator position N	V	W	X	Y	Z	Position	Special polarization	Insulator weight (g) including contacts pin	socket
	4	– –	**22-10** 16	E	–	–	35	110	250	325	–	–	17	31
	5 2 3	**22-12** 100 15	**22-12** 8 16	D	0	–	80	110	250	280	–	–	28	42
▲	19	**22-14** 15	**22-14** 16	A	0	–	80	–	–	280	–	–	30	50
	6 5 1	–	**22-15** 12 16	A (A, B, C, E, F) E (D)	0	–	80	110	250	280	–	–	30	50
	9 3 6	–	**22-16** 12 16	A	0	–	80	110	250	280 –	–	–	28	45
	14	–	**22-19** 16	A	0	–	80	110	250	280	–	–	28	47
	9	–	**22-20** 16	A	0	–	35	110	250	325	–	–	22	39
	3 2 1	–	**22-21** 16 0	A	0	–	80	110	250	280 –	–	–	49	58
	4	**22-22** 100	**22-22** 8	A	0	–	–	110	250	–	–	–	42	58
	8	–	**22-23** 12	D (H) A (all others)	0	–	35	–	250	–	–	–	34	54
	9 1 8	**22-27** 60 15	**22-27** 8 16	A (A to H) D (J)	0	–	80	–	250	280	–	–	21	34

▲ Attention: for all alternate positions of these contact arrangements a tendency to overmate can be stated. It is within the customer's responsibility to use these insert positions.

Dimensions shown in mm
Specifications and dimensions subject to change

View on Mating face of Pin Insulator	No. of Contacts	**Contact arrangement** Contact size VG	CA	Service rating	Insulator position N	V	W	X	Y	Z	Position	Special polarization	Insulator weight (g) including contacts pin	socket
	7	–	**22-28** 12	A	–	–	80	–	–	280	–	–	33	50
	4	**22B22** 60	–	A	0	–	–	110	250	–	–	–	42	58
	7	–	**24-2** 12	D	0	–	80	–	–	280	–	–	33	53
	4 1 3	–	**24-4** 0 16	D	–	–	80	110	250	280	–	–	51	63
	16	–	**24-5** 16	A	–	–	80	110	250	280	–	–	30	54
	8 8	–	**24-6** 12	A (B,C,D,E,F)	0	–	80	110	250	280	–	–	32	41
	16 2 14	–	**24-7** 12 16	A	0	–	80	110	250	280	–	–	45	65
	2	–	**24-9** 4	A	0	–	35	110	250	325	–	–	45	60
	7	**24-10** 100	**24-10** 8	A	0	–	80	–	–	280	–	–	65	85
	9 3 6	**24-11** 100/8 25/12	**24-11** 8 12	A	0	–	35	110	250	325	–	–	55	75

▲ Attention: for all alternate positions of these contact arrangements a tendency to overmate can be stated. It is within the customer's responsibility to use these insert positions.

View on Mating face of Pin Insulator	No. of Contacts	**Contact arrangement** Contact size VG	CA	Service rating	Insulator position N	V	W	X	Y	Z	Position	Special polarization	Insulator weight (g) including contacts pin	socket
	5 2 3	**24-12** 4 12	**24-12** 4 12	A	0	–	80	110	250	280	–	–	60	80
	12	–	**24-19** 16	A	0	–	–	–	–	–	–	–	28	47
	11 2 9	–	**24-20** 12 16	D	0	–	80	110	250	280	–	–	40	60
	4	–	**24-22** 8	D	0	–	45	110	250		–	–	44	61
	7	–	**24-27** 16	E	–	–	80	–	–	280	–	–	21	37
	24	**24-28** 15	**24-28** 16	Instr.	0	–	80	110	250	280	–	–	40	65
	12	–	**24A24** 12	A	– – – –	– – – –	– – – –	– – – –	– – – –	– – – –	2 4 9 12	260 80 280 100	46	71
	28	–	**24A28** 16	Instr.	–	–	65	146	235	–	–	–	42	75
	14 12 2	–	**28-2** 16 12	D	–	–	35	110	250	325	–	–	43	61
	5 2 2 1	–	**28-5** 4 16 12	D	–	–	35	110	250	325	–	–	60	70

▲ Attention: for all alternate positions of these contact arrangements a tendency to overmate can be stated. It is within the customer's responsibility to use these insert positions.

Dimensions shown in mm
Specifications and dimensions subject to change

View on Mating face of Pin Insulator	No. of Contacts	**Contact arrangement** Contact size VG	CA	Service rating	Insulator position N	V	W	X	Y	Z	Position	Special polarization	Insulator weight (g) including contacts pin	socket
	12 6 6	–	**28-9** 16 12	D	–	–	80	110	250	280	–	–	46	65
	7 2 2 3	–	**28-10** 4 8 12	A (= A, B, C, D, E, F) D (= G)	–	–	80	110	250	280	–	–	80	91
	22 4 18	**28-11** 25 15	**28-11** 12 16	A	0	–	80	110	250	280	–	–	65	110
	26	–	**28-12** 16	A	0	–	90	180	270	–	–	–	47	77
	35	–	**28-15** 16	A	0	–	80	110	250	280	–	–	54	90
	20	–	**28-16** 16	A (A-L) D (M, N, P) B (R)	0	–	80	110	250	280	–	–	41	68
	10 6 4	–	**28-19** 16 12	A (= C, E, G, J, K, L) D = A, B B = H, M	–	–	80	110	250	280	–	–	40	58
	14 10 4	**28-20** 25 15	**28-20** 12 16	A	0	–	80	110	250	280	–	–	65	110

▲ Attention: for all alternate positions of these contact arrangements a tendency to overmate can be stated. It is within the customer's responsibility to use these insert positions.

View on Mating face of Pin Insulator	No. of Contacts	**Contact arrangement** Contact size VG	CA	Service rating	Insulator position N	V	W	X	Y	Z	Position	Special polarization	Insulator weight (g) including contacts pin	socket
	37	**28-21** 15	**28-21** 16	A	0	–	80	110	250	280	–	–	58	93
	6 3 3	**28-22** 160/4 15/16	**28-22** 4 16	D	0	–	70	145	215	290	–	–	80	120
	All alternating insert position as above are permitted for VG95234 types.													
	12	–	**28-51** 12	D	–	–	80	135	195	–	–	–	57	77
	9 4 5	–	**28A16** 4 16	A (e) Instr. (all others)	0 – – –	– – – –	– – – –	– – – –	– – – –	– – – –	2 3 8 9	260 110 250 280	100	135
	43	–	**28A51** 16	A	0 – – – –	– – – – –	– – – – –	– – – – –	– – – – –	– – – – –	3 4 8 9 12	110 80 250 280 100	64	107
	28 9 19	**28A63** 25 15	**28A63** 12 16	A	0	–	–	100	260	–	–	–	85	135
	5 2 3	**32-1** 500/0 25/12	**32-1** 0 12	E (A) D (all others)	0	–	80	110	250	280	–	–	130	155
	2		**32-5** 0	D	0	–	35	110	250	325	–	–	86	114

▲ Attention: for all alternate positions of these contact arrangements a tendency to overmate can be stated. It is within the customer's responsibility to use these insert positions.

Dimensions shown in mm
Specifications and dimensions subject to change

Cannon VG/CA-Bayonet

View on Mating face of Pin Insulator	No. of Contacts	**Contact arrangement** Contact size VG	CA	Service rating	Insulator position N	V	W	X	Y	Z	Position	Special polarization	Insulator weight (g) including contacts pin	socket
	23 2 3 2 16	**32-6** 160/4 60/8 25/12 15/16	**32-6** 4 8 12 16	A	0	–	80	110	250	280	–	–	130	170
	35 7 28	**32-7** 25 15	**32-7** 12 16	Instr. (A, B, U, I.) A (all others)	0	–	80	125	235	280	–	–	110	160
	30 6 24	–	**32-8** 12 16	A	0	–	80	125	235	280	–	–	105	155
	14 12 2	–	**32-9** 16 4	D	0	–	80	110	250	280	–	–	79	130
	23 5 18	–	**32-13** 12 16	D	0	–	80	110	250	280	–	–	95	145
	8 2 6	–	**32-15** 0 12	D	0	–	35	110	250	325	–	–	140	165
	4	–	**32-17** 4	D	0	–	45	110	250	–	–	–	80	116

▲ Attention: for all alternate positions of these contact arrangements a tendency to overmate can be stated. It is within the customer's responsibility to use these insert positions.

View on Mating face of Pin Insulator	No. of Contacts	**Contact arrangement** Contact size VG	CA	Service rating	Insulator position N	V	W	X	Y	Z	Position	Special polarization	Insulator weight (g) including contacts pin	socket
	54	–	**32A10** 16	A	– – – – – –	– – – – – –	– – 80 – – –	– – 110 – – –	– – 250 – – –	– – 280 – – –	2 3 4 8 9 12	260 110 80 250 280 100	89	132
	47	–	**32A47** 16	A	– – – – – –	– – – – – –	– – – – – –	– – – – – –	– – – – – –	– – – – – –	2 3 4 8 9 12	260 110 80 250 280 100	73	120
	55		**32A55** 16	A	–	–	80	110	250	280	–	–	90	134
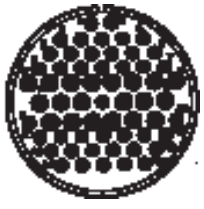	61 20 41	**32A69** 15 10	**32A69** 16 20	Instr.	0	–	–	110	250	–	–	–	49	84
	Not for through-bulkhead receptacle C1 / C2.													
	6 3 3	**36-3** 500/0 25/12	**36-3** 0 12	D	0	–	70	145	215	290	–	–	165	200
	All alternating insert position as above are permitted for VG95234 type.													
	4	**36-5** 500/0	**36-5** 0	A	0	–	–	120	240	–	–	–	152	181
	6 4 2	**36-6** 4 0	**36-6** 4 0	A	0	–	35	110	250	325	–	–	155	173

▲ Attention: for all alternate positions of these contact arrangements a tendency to overmate can be stated. It is within the customer's responsibility to use these insert positions.

Dimensions shown in mm
Specifications and dimensions subject to change

View on Mating face of Pin Insulator	No. of Contacts	**Contact arrangement** Contact size VG	CA	Service rating	Insulator position N	V	W	X	Y	Z	Position	Special polarization	Insulator weight (g) including contacts pin	socket
	47 7 40	–	**36-7** 12 16	A	–	–	80	110	250	280	–	–	92	144
	47 1 46	–	**36-8** 12 16	A	–	–	80	110	250	280	–	–	80	132
	31 14 14 2 1	–	**36-9** 16 12 8 4	A	0	–	80	125	235	280	–	–	116	159
	48	**36-10** 15	**36-10** 16	A	0	–	80	125	235	280	–	–	79	133
	16 5 5 6	–	**36-14** 8 12 16	D	0	–	–	–	–	–	–	–	150	230
	35	–	**36-15** 16	D (m) A (all others)	0	–	60	125	245	305	–	–	70	111

▲ Attention: for all alternate positions of these contact arrangements a tendency to overmate can be stated. It is within the customer's responsibility to use these insert positions.

View on Mating face of Pin Insulator	No. of Contacts	**Contact arrangement** Contact size VG	CA	Service rating	Insulator position N	V	W	X	Y	Z	Position	Special polarization	Insulator weight (g) including contacts pin	socket
	52	–	**36A34** 16	A	– – – – – – –	– – – – – – –	– – – – – – –	– – – – – – –	– – – – – – –	– – – – – – –	2 3 4 8 9 12 20	260 110 80 250 280 100 220	83	139
	8 4 4	–	**36A35** 16 0	A	– – – –	– – – –	– – – –	– – – –	– – – –	– – – –	2 3 8 9	260 110 250 280	172	183
	27	–	**36A46** 12	A	– – – – – –	– – – – – –	– – – – – –	– – – – – –	– – – – – –	– – – – – –	2 3 4 8 9 12	260 110 80 250 280 100	112	154
	39 8 31	–	**36A98** 8 16	Instr.	0	–	–	–	–	–	–	–	160	140
▲	65 15 50	–	**36A99** 16 20*	Instr.	–	–	30	135	–	–	–	–	80	121

* reduced contact termination 0,3 mm^2

▲ Attention: for all alternate positions of these contact arrangements a tendency to overmate can be stated. It is within the customer's responsibility to use these insert positions.

Dimensions shown in mm
Specifications and dimensions subject to change

Alternate Insert Positions

Indicates location of centerline of key or keyway of shells in fixed normal position. Insert is rotated as shown by arrow and letters.

Connectors according to VG95234 are generally available with insert positions X and Y only.

Tolerances:
10SL-20: ± 2°
22-36: ± 1,5°
32A69: ± 1°

Normal position

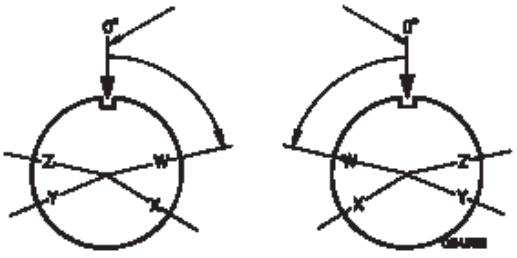

Pin
Mating face

Socket
Mating face

Special Insert Alternations

Special insert alternations are marked by positions. The position number indicates the turning of the contact insert in the direction of the polarizing key in view of the mating or termination side of the socket insulator.

Position	Polarization
2	260°
3	110°
4	80°
5	use pos. 3
6	85°
8	250°
9	280°
11	105°
12	100°
13	use pos. 8
14	30°
15	45°
16	120°
17	130°
18	150°
19	195°
20	220°
21	255°
22	290°
23	165°
24	330°
25	235°
26	125°

Positions
View shows mating side of pin or termination side of socket.

Insert positions are added without hyphen directly behind the contact type.

Example:
CA3106F32A10P$\boxed{2}$-B-01

Contact arrangement	Position of	Contact arrangement	Polarization
12SA10	3 8	12SA10 12SA10	110° 250°
18-17	12	18-9	100°
24A24	2 4 9 12	24A24 24A24 24A24 24A24	260° 80° 280° 100°
32-16	12	32-6	100°

Contact Arrangements

Contact arrangement	No. of contacts	Contact size 0 500	4 160	8 100 60	12 25	16 15	20 10
12S4	1					1	
14S4	1					1	
16-12	1		1				
18-6	1		1				
18-7	1			1			
20-2	1	1					
22-7	1	1					
10SL4	2					2	
14S9	2					2	
16S4	2					2	
16-11	2				2		
16A11	2				2		
18-3	2				2		
20-23	2			2			
22-1	2			2			
22-8	2				2		
24-9	2		2				
32-5	2	2					
10SL3	3					3	
14S1	3					3	
14S7	3					3	
16S5	3					3	
16-7	3			1		2	
16-10	3				3		
18-5	3				2	1	
18-21	3				3		
18-22	3					3	
20-6	3					3	
20-19	3			3			
22-2	3			3			
22-9	3			3			
22-21	3	1				2	
12SA10	4					4	
14S2	4					4	
16-9	4				2	2	
18-4	4					4	
18-10	4				4		
18-13	4			1	3		
20-4	4				4		
20-24	4			2		2	
22-4	4			2	2		
22-10	4					4	
22-22	4			4			
22B22	4			4			
24-4	4	1				3	
24-22	4			4			
32-17	4		4				
36-5	4	4					

Contact arrangement	No. of contacts	Contact size 0 500	4 160	8 100 60	12 25	16 15	20 10
14S5	5					5	
16S8	5					5	
18-11	5				5		
18-20	5					5	
22-12	5			2		3	
24-12	5		2		3		
28-5	5		2		1	2	
32-1	5	2			3		
14S6	6					6	
18-12	6					6	
20-8	6			2		4	
20-22	6			3		3	
22-5	6				2	4	
22-15	6				5	1	
28-22	6		3			3	
36-3	6	3			3		
36-6	6	2	4				
14SA7	7					7	
16S1	7					7	
18-9	7				2	5	
18-17	7				2	5	
20-15	7				7		
22-28	7				7		
24-2	7				7		
24-10	7			7			
24-27	7					7	
28-10	7		2	2	3		
18-8	8				1	7	
20-7	8					8	
22-23	8				8		
32-15	8	2			6		
36A35	8	4				4	
20-16	9				2	7	
20-18	9				3	6	
20A9	9				9		
22-16	9				3	6	
22-20	9					9	
22-27	9			1		8	
24-11	9			3	6		
28A16	9		4			5	
18-1	10					10	
18-19	10					10	
28-19	10				4	6	
20-33	11					11	
24-20	11				2	9	

Contact Arrangements

Contact arrangement	No. of contacts	Contact size 0 500	4 160	8 100 60	12 25	16 15	20 10
24-19	12					12	
24A24	12				12		
28-9	12				6	6	
28-51	12				12		
20-11	13					13	
20-27	14					14	
22-19	14					14	
28-2	14				2	12	
28-20	14				10	4	
32-9	14	2				12	
24-5	16					16	
24-7	16				2	14	
36-14	16			5	5	6	
20-29	17					17	
20A48	19					19	
22-14	19					19	
28-16	20					20	
28-11	22				4	18	
32-6	23		2	3	2	16	
32-13	23				5	18	
24-28	24					24	
28-12	26					26	
36A46	27				27		
24A28	28					28	
28A63	28				9	19	
32-8	30				6	24	
36-9	31		1	2	14	14	
28-15	35					35	
32-7	35				7	28	
36-15	35					35	
28-21	37					37	
36A98	39			8		31	

Contact arrangement	No. of contacts	Contact size 0 500	4 160	8 100 60	12 25	16 15	20 10
28A51	43					43	
32A47	47					47	
36-7	47				7	40	
36-8	47				1	46	
36-10	48					48	
36A34	52					52	
32A10	54					54	
32A55	55					55	
32A69	61					20	41
36A99	65					15	50

Dimensions shown in mm
Specifications and dimensions subject to change

Box Mounting Receptacle

VG 95234 – Style A

CA 3102E-B and Modifications, see page 9

Receptacle for front panel mounting with square flange.
Threaded holes in flange not possible.

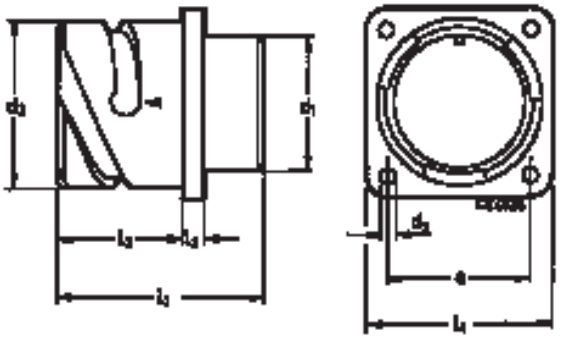

VG95234 Part no.	Cannon Part no.	d_1 max.	d_2 H13	d_3 –0,15	l_1 ±0,3	l_2 +0,4	l_3 ±0,2	l_4 ±0,3	Weight[1] g max.
VG95234A-10SL	CA3102E10SL-**-B	16,2	3,2	18,2	24,7	14,2	2,8	25,4	12
–	CA3102E12S-**-B	16,2	3,2	21,4	24,7	14,2	3,2	28,0	15
VG95234A-14S	CA3102E14S-**-B	19,2	3,2	24,6	24,7	14,2	3,2	30,0	17
VG95234A-16S	CA3102E16S-**-B	22,4	3,2	27,4	24,7	14,2	3,2	32,5	19
VG95234A-16	CA3102E16-**-B	22,4	3,2	27,4	33,8	19,0	3,2	32,5	22
VG95234A-18	CA3102E18-**-B	25,6	3,2	30,8	33,8	19,0	4,0	35,0	28
VG95234A-20	CA3102E20-**-B	29,0	3,2	34,2	33,8	19,0	4,0	38,0	33
VG95234A-22	CA3102E22-**-B	32,2	3,2	37,4	33,8	19,0	4,0	41,0	38
VG95234A-24	CA3102E24-**-B	35,3	3,7	40,9	33,8	20,6	4,0	44,5	46
VG95234A-28	CA3102E28-**-B	41,4	3,7	46,7	33,8	20,6	4,0	50,8	52
VG95234A-32	CA3102E32-**-B	47,8	4,3	53,4	33,8	22,2	4,0	57,0	64
VG95234A-36	CA3102E36-**-B	52,6	4,3	59,6	33,8	22,2	4,0	63,5	80

[1] Weight without insulator

CA02L-B designates a receptacle for front panel mounting with solder pin contacts to solder into printed circuits. All pattern drawings upon request. For all other dimensions see above table.

For contact arrangements with #16 and #12 contacts only.

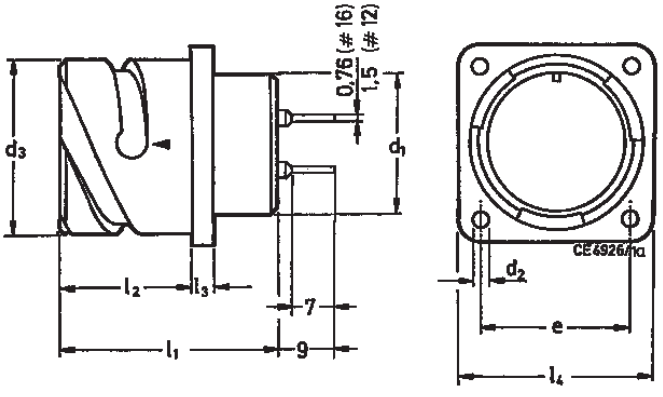

Box Mounting Receptacle

VG95234 Style B1 (with threaded holes in flange)

CA3102-B and Modifications, e g **-04, -109** or **-111**

CA3102-B designates a receptacle with square flange for rear panel mounting.

VG95234 Style **B2** (with through holes in flange)

CA3102E-B and Modifications, see page 9

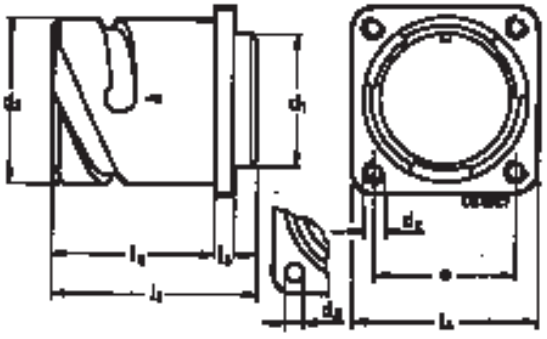

Style B2

VG95234 Part no.	Cannon Part no.	d_1 max.	d_2 B1 H13	B2	d_3 –0,15	l_1 ±0,3	l_2 +0,4	l_3 ±0,2	l_4 ±0,3	Weight[1] g max.
VG95234XX-10SL-*	CA3102E10SL-*B-***	16,2	M4	3,2	18,2	24,7	18,2	2,8	25,4	14
–	CA3102E12S-*B-***	16,2	M4	3,2	21,4	24,7	18,2	3,2	28,0	18
VG95234XX-14S-*	CA3102E14S-*B-***	19,2	M4	3,2	24,6	24,7	18,2	3,2	30,0	21
CG95234XX-16S-*	CA3102E16S-*B-***	22,4	M4	3,2	27,4	24,7	18,2	3,2	32,5	22
VG95234XX-16-*	CA3102E16-*B-***	22,4	M4	3,2	27,4	33,8	21,5	3,2	32,5	27
VG95234XX-18-*	CA3102E18-*B-***	25,6	M4	3,2	30,8	33,8	23,05	4,0	35,0	33
VG95234XX-20-*	CA3102E20-*B-***	29,0	M4	3,2	34,2	33,8	23,05	4,0	38,0	37
VG95234XX-22-*	CA3102E22-*B-***	32,2	M4	3,2	37,4	33,8	23,05	4,0	41,0	42
VG95234XX-24-*	CA3102E24-*B-***	35,3	M4	3,7	40,9	33,8	23,05	4,0	44,5	48
VG95234XX-28-*	CA3102E28-*B-***	41,4	M5	3,7	46,7	33,8	24,05	4,0	50,8	58
VG95234XX-32-*	CA3102E32-*B-***	47,8	M5	4,3	53,4	33,8	24,05	4,0	57,0	72
VG95234XX-36-*	CA3102E36-*B-***	54,1	M5	4,3	59,6	33,8	24,05	4,0	63,5	84

[1] Weight without insulator

CA20L-B designates a receptacle for rear panel mounting with solder pin contacts to solder into printed circuits. All pattern drawings upon request. For all other dimensions see above table.

For contact arrangements with #16 and #12 contacts only.

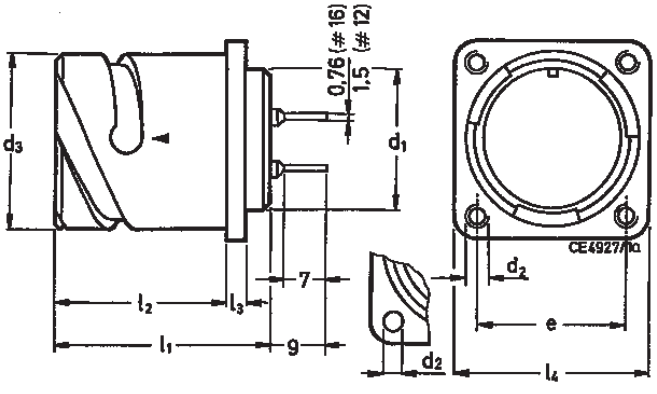

Mod. -05

Dimensions shown in mm
Specifications and dimensions subject to change

Thru-Bulkhead Receptacle

VG 95234 Style C1 resp. **TBF-B** (with threaded holes)
VG 95234 Style C2 resp **TBF-B-05** (with flange through holes)

TBF-B designates a bulkhead receptacle with mounting flange.

Modifications see page 9

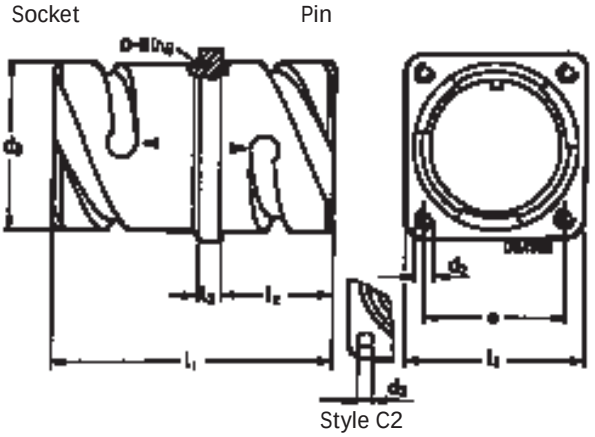

VG95234 Part no.	Cannon Part no.	d_2 C1	C2 H13	d_2 –0,15	e ±0,1	l_1 ±0,7	l_2 +0,3	l_3 ±0,2	l_4 ±0,3	Weight[1] g max.
VG95234XX-10SL-*	TBF10SL-*B-***	M4	3,2	18,2	18,2	37,5	14,2	2,8	25,4	17
–	TBF12S-*B-***	M4	3,2	21,4	20,6	37,5	14,2	3,2	28,0	24
VG95234XX-14S-*	TBF14S-*B-***	M4	3,2	24,6	23,0	37,5	14,2	3,2	30,0	29
CG95234XX-16S-*	TBF16S-*B-***	M4	3,2	27,4	24,6	37,5	14,2	3,2	32,5	34
VG95234XX-16-*	TBF16-*B-***	M4	3,2	27,4	24,6	51,4	19,0	3,2	32,5	41
VG95234XX-18-*	TBF18-*B-***	M4	3,2	30,8	27,0	51,4	19,0	4,0	35,0	49
VG95234XX-20-*	TBF20-*B-***	M4	3,2	34,2	29,4	51,4	19,0	4,0	38,0	56
VG95234XX-22-*	TBF22-*B-***	M4	3,2	37,4	31,8	51,4	19,0	4,0	41,0	61
VG95234XX-24-*	TBF24-*B-***	M4	3,7	40,9	34,9	51,4	20,6	4,0	44,5	65
VG95234XX-28-*	TBF28-*B-***	M5	3,7	46,7	39,7	51,4	20,6	4,0	50,8	76
VG95234XX-32-*	TBF32-*B-***	M5	4,3	53,4	44,5	51,4	22,2	4,0	57,0	92
VG95234XX-36-*	TBF36-*B-***	M5	4,3	59,6	49,2	51,4	22,2	4,0	63,5	103

[1] Weight without insulator, grommets and contacts.

Straight Plug

CA3106E-B designates a straight plug with endbell, cable clamp and telescoping bushing

VG 95234 Style **D** resp.
CA3106E-B and Modifications, see page 9

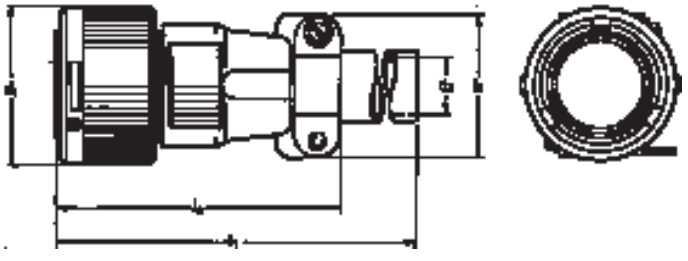

VG95234 Part no.	Cannon Part no.	d_1 max.	d_2[2] max.	l_1 max.	l_2 max.	l_3 max.	l_4 max.	Weight[1] g max.
VG95234D-10SL-*	CA3106E10SL-**B-***	22,8	6,5	115	55	22,7	22,7	30
	CA3106E12S-**B-***	26,0	6,5	115	55	22,7	22,7	37
VG95234D-14S-*	CA3106E14S-**B-***	29,2	9,0	115	60	27,5	27,5	44
VG95234D-16S-*	CA3106E16S-**B-***	32,0	11,0	115	60	30,0	30,0	54
VG95234D-16-*	CA3106E16-**B-***	32,0	11,0	120	70	30,0	30,0	62
VG95234D-18-*	CA3106E18-**B-***	36,5	14,2	120	75	33,0	33,0	70
VG95234D-20-*	CA3106E20-**B-***	39,9	15,8	120	75	37,5	37,5	85
VG95234D-22-*	CA3106E22-**B-***	43,1	15,8	120	75	37,5	37,5	92
VG95234D-24-*	CA3106E24-**B-***	46,6	21,4	120	90	43,3	43,3	127
VG95234D-28-*	CA3106E28-**B-***	53,4	21,4	120	90	48,0	43,3	154
VG95234D-32-*	CA3106E32-**B-***	60,1	26,7	120	90	55,0	51,7	199
VG95234D-36-*	CA3106E36-**B-***	66,3	31,7	130	100	58,0	58,0	260

[1] Weight without insulator, grommets and contacts.

[2] For max. cable entry.

Plug 90°

VG 95234 Style E1 (with flex tube)
CA 3108 F-B and Modifications, see page 9

CA3108E/F designates a plug 90°, which is available with cable clamp and bushing (E) or with flex tube termination (F)

VG 95234 Style **E** (with cable clamp and telescoping bushing)

CA 3108E-B and Modifications, see page 9

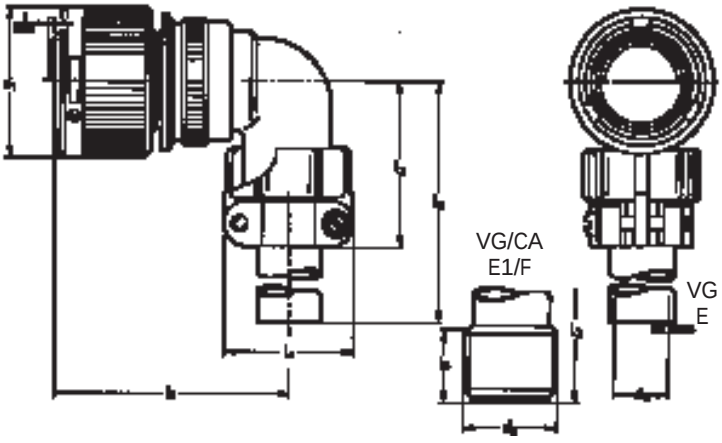

VG 95 234 Part no.	Cannon Part no.	d_3-Thread Style E1 CA3108F	d_1 max.	d_2[2] max.	l_1 max.	l_2 max. E	l_3 max. E1	l_3 max. E	l_4 max.	l_5	Weight[1] g E	Weight[1] g E1
VG95234XX-10SL-*	CA3108X10SL-**B-***	5/8-24NEF-2A	22,8	6,5	45	42	30	100	22,7	9,4	37	27
–	CA3108X12S-**B-***	5/8-24NEF-2A	26,0	6,5	45	42	30	100	22,7	9,4	45	35
VG95234XX-14S-*	CA3108X14S-**B-***	3/4-20UNEF-2A	29,2	9,0	47	42	30	100	27,5	9,4	58	43
VG95234XX-16S-*	CA3108X16S-**B-***	7/8-20UNEF-2A	32,0	11,0	48	45	30	100	30,0	9,4	68	48
VG95234XX-16-*	CA3108X16-**B-***	7/8-20UNEF-2A	32,0	11,0	57	45	30	100	30,0	9,4	78	58
VG95234XX-18-*	CA3108X18-**B-***	1-20UNEF-2A	36,5	14,2	58	53	35	100	33,0	9,4	90	58
VG95234XX-20-*	CA3108X20-**B-***	1 3/16-18UNEF-2A	39,9	15,8	61	53	35	100	37,5	9,4	109	74
VG95234XX-22-*	CA3108X22-**B-***	1 3/16-18UNEF-2A	43,1	15,8	61	53	35	100	37,5	9,4	113	78
VG95234XX-24-*	CA3108X24-**B-***	1 7/16-18UNEF-2A	46,6	21,4	66	58	40	100	43,3	9,4	159	104
VG95234XX-28-*	CA3108X28-**B-***	1 7/16-18UNEF-2A	53,4	21,4	66	58	40	100	43,3	9,4	181	126
VG95234XX-32-*	CA3108X32-**B-***	1 3/4 -18UNS-2A	60,1	26,7	72	66	45	110	51,7	11,0	245	160
VG95234XX-36-*	CA3108 36-**B-***	2 -18UNS-2A	66,3	31,7	75	69	50	110	58,0	12,6	300	190

[1] Weight without insulator, grommets and contacts.

[2] For max. cable entry.

Straight Plug

VG 95234 Style F

CA3101E-B designates a cable connection plug with cable clamp and and telescoping bushing

CA 3101E-B and Modifications, see page 9

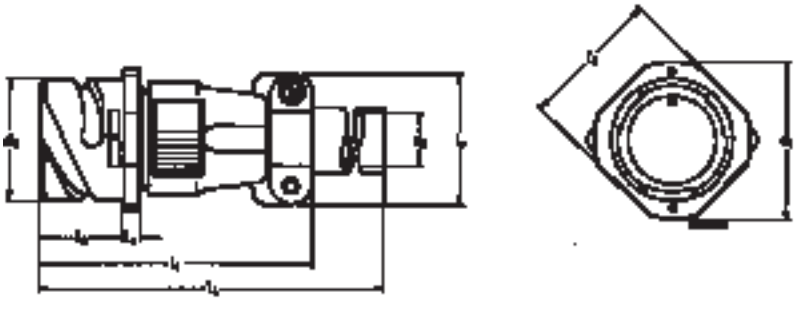

VG 95234 Part no.	Cannon Part no.	d_1 max.	d_2[2]	d_3 -0,15	l_1 max.	l_2 ±0,1	l_3 ±0,2	l_4 max.	l_5 ±0,2	l_7 max.	Weight[1] g max.
VG95234F-10SL-*	CA3101E10SL-**B-***	25,2	6,5	18,2	57	16,6	2,8	120	20,6	22,7	35
–	CA3101E12S-**B-***	27,8	6,5	21,4	57	16,6	3,2	120	23,6	22,7	43
VG95234F-14S-*	CA3101E14S-**B-***	29,8	9,0	24,6	59	16,6	3,2	120	25,4	27,5	50
VG95234F-16S-*	CA3101E16S-**B-***	32,3	11,0	27,4	60	16,6	3,2	120	28,6	30,0	60
VG95234F-16-*	CA3101E16-**B-***	32,3	11,0	27,4	68	23,9	3,2	125	28,6	30,0	65
VG95234F-18-*	CA3101E18-**B-***	34,8	14,2	30,8	72	23,9	4,0	125	31,7	33,0	80
VG95234F-20-*	CA3101E20-**B-***	37,8	15,8	34,2	72	23,9	4,0	125	34,9	37,5	95
VG95234F-22-*	CA3101E22-**B-***	41,1	15,8	37,4	72	23,9	4,0	125	38,1	37,5	105
VG95234F-24-*	CA3101E24-**B-***	44,6	21,4	40,9	78	23,9	4,0	125	41,3	43,3	140
VG95234F-28-*	CA3101E28-**B-***	50,9	21,4	46,7	79	23,9	4,0	125	47,6	43,3	160
VG95234F-32-*	CA3101E32-**B-***	57,1	26,7	53,4	78	23,9	4,0	125	54,0	51,7	205
VG95234F-36[*)]-*	CA3101E36[*)]-**B-***	63,6	31,7	59,6	78	23,9	4,0	135	60,6	58,0	270

[1] Weight without insulator, grommets and contacts.
[*)] For contact insert 36-5P a support washer is included.

[2] For max. cable entry.

Dimensions shown in mm
Specifications and dimensions subject to change

Straight Plug

VG95234 – Style G

CA3106E-B, -02, -03 or **-06** designates a straight plug with adapter for heat shrinkable boots

CA3106E-B and Modificationes, see page 9

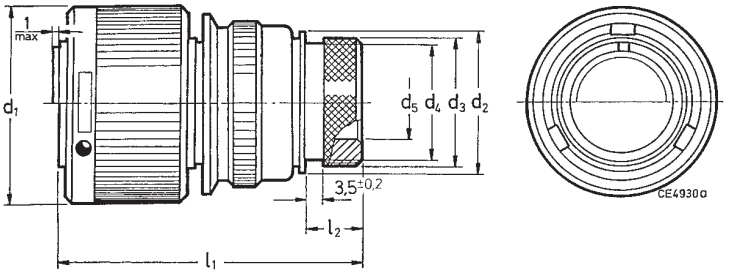

VG 95234 Part no.	Cannon Part no.	d_1 max.	d_2 ±0,2	d_3 ±0,2	d_4 max.	d_5 min.	l_1 max.	l_2 ±0,5	Weight[1] g max.
VG95234G-10SL-*	CA3106E10SL-**B-***	22,8	17,0	15,5	13,3	7,7	50	11,7	24
–	CA3106E12S-**B-***	26,0	17,8	15,5	13,3	7,9	50	11,7	35
VG95234G-14S-*	CA3106E14S-**B-***	29,2	20,1	19,1	17,0	10,6	50	11,7	41
VG95234G-16S-*	CA3106E16S-**B-***	32,0	23,5	23,9	21,9	13,5	50	11,7	51
VG95234G-16-*	CA3106E16-**B-***	32,0	23,5	23,9	21,9	13,5	60	11,7	58
VG95234G-18-*	CA3106E18-**B-***	36,5	26,5	23,9	21,9	14,6	60	11,7	65
VG95234G-20-*	CA3106E20-**B-***	39,9	30,2	29,6	26,2	18,7	65	12,7	75
VG95234G-22-*	CA3106E22-**B-***	43,1	33,6	29,6	26,2	20,8	65	12,7	80
VG95234G-24-*	CA3106E24-**B-***	46,6	38,1	37,8	34,5	24,6	65	12,7	95
VG95234G-28-*	CA3106E28-**B-***	53,4	41,4	37,8	34,5	27,0	65	12,7	120
VG95234G-32-*	CA3106E32-**B-***	60,1	48,6	47,8	43,6	33,3	70	15,2	165
VG95234G-36-*	CA3106E36-**B-***	66,3	54,8	47,8	43,6	38,5	80	15,2	180

[1] Weight without insulator, grommets and contacts.

Straight Plug

VG95234 Style **H**

CA3106-F-B designates a straight plug for flex tube

CA3106-B and Modifications, see page 9

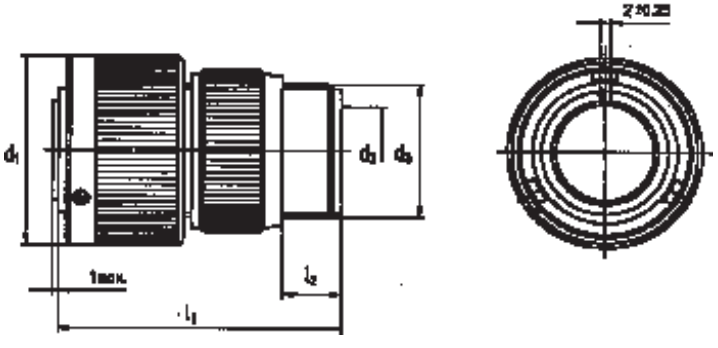

VG 95234 Part no.	Cannon Part no.	d_3-Thread	d_1 max.	d_{2a}[2]	l_1 max.	l_2 min.	Weight[1] g max.
VG95234H-10SL-*	CA3106F10SL-**B-***	5/8-24NEF-2A	22,8	8,2	50	9,5	21
–	CA3106F12S-**B-***	5/8-24NEF-2A	26,0	8,2	50	9,5	29
VG95234H-14S-*	CA3106F14S-**B-***	3/4-20UNEF-2A	29,2	11,1	50	9,5	33
VG95234H-16S-*	CA3106F16S-**B-***	7/8-20UNEF-2A	32,0	14,3	50	9,5	42
VG95234H-16-*	CA3106F16-**B-***	7/8-20UNEF-2A	32,0	14,3	60	9,5	51
VG95234H-18-*	CA3106F18-**B-***	1-20UNEF-2A	36,5	16,7	60	9,5	59
VG95234H-20-*	CA3106F20-**B-***	1 3/16-18UNEF-2A	39,9	19,8	60	9,5	59
VG96234H-22-*	CA3106F22-**B-***	1 3/16-18UNEF-2A	43,1	19,8	60	9,5	62
VG95234H-24-*	CA3106F24-**B-***	1 7/16-18UNEF-2A	46,6	25,4	65	9,5	84
VG95234H-28-*	CA3106F28-**B-***	1 7/16-18UNEF-2A	53,4	27,0	65	9,5	100
VG95234H-32-*	CA3106F32-**B-***	1 3/4-18UNS-2A	60,1	32,5	65	11,0	116
VG95234H-36-*	CA3106F36-**B-***	2-18UNS-2A	66,3	35,7	80	11,8	142

[1] Weight without insulator, grommets and contacts.

[2] For max. cable entry.

Wall Mounting Receptacle

for rear mounting

VG95234 Style J_1 (with threaded holes in flange)
VG95234 Style J_2 (with through holes in flange)

CA3100E-B and Modifications e g -05 (with through holes)

CA3100E-B designates a wall mounting receptacle with cable clamp and telescoping bushing

CA3100E-B and Modifications e g -01, -F80 (for ordered contacts)

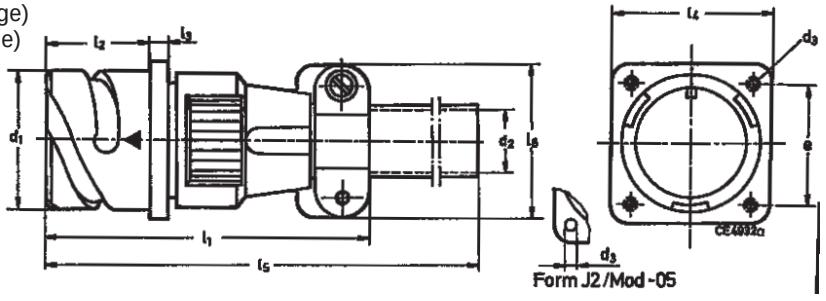

VG95234 Part no.	Cannon Part no.	d_1 -0,15	d_2[1]	d_3 J1	d_3 J2	l_1 max.	l_2 +0,4	l_3 ±0,2	l_4 ±0,3	l_5 max.
VG95234*XX-10SL-*	CA3100E10SL-**-B-***	18,2	6,5	M4	3,2	57	18,2	2,8	25,4	120
–	CA3100E12S-**-B-***	21,4	6,5	M4	3,2	57	18,2	3,2	28,0	120
VG95234*XX-14S-*	CA3100E14S-**-B-***	24,6	9,0	M4	3,2	59	18,2	3,2	30,0	120
VG95234*XX-16S-*	CA3100E16S-**-B-***	27,4	11,0	M4	3,2	60	18,2	3,2	32,5	120
VG95234*XX-16-*	CA3100E16-**-B-***	27,4	11,0	M4	3,2	68	21,5	3,2	32,5	125
VG95234*XX-18-*	CA3100E18-**-B-***	30,8	14,2	M4	3,2	72	23,05	4,0	35,0	125
VG95234*XX-20-*	CA3100E20-**-B-***	34,2	15,8	M4	3,2	72	23,05	4,0	38,0	125
VG95234*XX-22-*	CA3100E22-**-B-***	37,4	15,8	M4	3,2	72	23,05	4,0	41,0	125
VG95234*XX-24-*	CA3100E24-**-B-***	40,9	21,4	M4	3,7	78	23,05	4,0	44,5	125
VG95234*XX-28-*	CA3100E28-**-B-***	46,7	21,4	M5	3,7	79	24,05	4,0	50,8	125
VG95234*XX-32-*	CA3100E32-**-B-***	53,4	26,7	M5	4,3	78	24,05	4,0	57,0	125
VG95234*XX-36-*	CA3100E36-**-B-***	59,6	31,7	M5	4,3	78	24,05	4,0	63,5	135

[1] For max. cable entry.

Plug 90°, Shielded

VG95234 Style K

CA3108F-B-13, -14 or **-15** designates a shielded plug with 90° endbell for flex tube

CA3108F and Modifications, see page 9

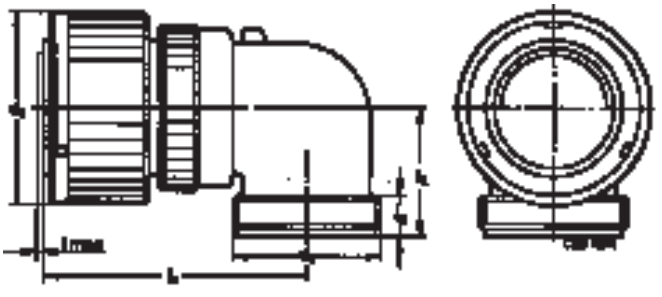

VG96234 Part no.	Cannon Part no.	d_3-Thread	d_1 max.	l_1 max.	l_2 max.	l_3 min.	Weight[1] g max.
–	CA3108F10SL-**-B-***	5/8-24UNEF-2A	22,8	45	22	9,4	27
VG95234K-12S-*	CA3108F12S-**-B-***	5/8-24UNEF-2A	26,0	45	22	9,4	35
VG95234K-14S-*	CA3108F14S-**-B-***	3/4-20UNEF-2A	29,2	47	24	9,4	43
VG95234K-16S-*	CA3108F16S-**-B-***	7/8-20UNEF-2A	32,0	48	25	9,4	48
VG95234K-16-*	CA3108F16-**-B-***	7/8-20UNEF-2A	32,0	57	25	9,4	58
VG95234K-18-*	CA3108F18-**-B-***	1-20UNEF-2A	36,5	58	27	9,4	58
VG95234K-20-*	CA3108F20-**-B-***	1 3/16-18UNEF-2A	39,9	61	29	9,4	74
VG95234K-22-*	CA3108F22-**-B-***	1 3/16-18UNEF-2A	43,1	61	30	9,4	78
VG95234K-24-*	CA3108F24-**-B-***	1 7/16-18UNEF-2A	46,6	66	32	9,4	104
VG95234K-28-*	CA3108F28-**-B-***	1 7/16-18UNEF-2A	53,4	66	34	9,4	126
CG95234K-32-*	CA3108F32-**-B-***	1 3/4-18UNS-2A	60,1	72	39,5	11,0	160
VG95234K-36-*	CA3108F36-**-B-***	2-18UNS-2A	66,3	75	45	12,6	190

[1] Weight without insulator, grommets and contacts.

Dimensions shown in mm
Specifications and dimensions subject to change

Straight Plug, shielded

VG95234 Style L

CA3106F-B-13, -14 or -15 designates a straight plug with endbell for flex tube

CA3106F-B and Modifications, see page 9

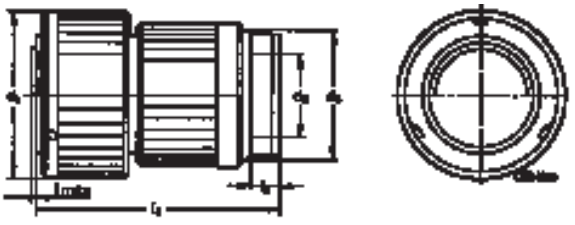

VG95234 Part no.	Cannon Part no.	d_3-Thread	d_1	d_2[2] max.	l_1	l_2 min.	Weight[1] g max.
VG95234L-10SL-*	CA3106F10SL-**-B-***	5/8-24UNEF-2A	22,8	8,2	50	9,5	21
VG95234L-12S-*	CA3106F12S-**-B-***	5/8-24UNEF-2A	26,0	8,2	50	9,5	29
VG95234L-14S-*	CA3106F14S-**-B-***	3/4-20UNEF-2A	29,2	11,1	50	9,5	33
VG95234L-16S-*	CA3106F16S-**-B-***	7/8-20UNEF-2A	32,0	14,3	50	9,5	42
VG95234L-16-*	CA3106F-16-**-B-***	7/8-20UNEF-2A	32,0	14,3	60	9,5	51
VG95234L-18-*	CA3106F-18-**-B-***	1-20UNEF-2A	36,5	16,7	60	9,5	59
VG95234L-20-*	CA3106F-20-**-B-***	1 3/16-18UNEF-2A	39,9	19,8	60	9,5	58
VG95234L-22-*	CA3106F-22-**-B-***	1 3/16-18UNEF-2A	43,1	19,8	60	9,5	62
VG95234L-24-*	CA3106F-24-**-B-***	1 7/16-18UNEF-2A	46,6	25,4	65	9,5	84
VG95234L-28-*	CA3106F-28-**-B-***	1 7/16-18UNEF-2A	53,4	27,0	65	9,5	100
VG95234L-32-*	CA3106F-32-**-B-***	1 3/4-18UNS-2A	60,1	32,5	65	11,0	116
VG95234L-36-*	CA3106F-36-**-B-***	2-18UNS-2A	66,3	35,7	80	11,8	142

[1] Weight without insulator, grommets and contacts.

[2] For max. cable entry.

Straight Plug, shielded

VG95234 Style M

CA3106E-B-13, -14 or -15 designates a straight, shielded plug with endbell for shielded braids, and heat shrinkable boots

CA3106E-B and Modifications, see page 9

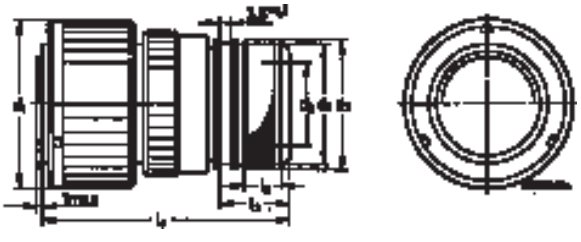

VG95234 Part no.	Cannon Part no.	d_1 max.	d_2[2] min.	d_3 ±0,5	d_4 max.	l_1 max.	l_2 +1	l_3 ±0,5	Weight[1] g max.
VG95234M-10SL-*	CA3106E10SL-**-B-***	22,8	7,7	18,5	16,3	55,0	17,0	7,0	40
–	CA3106E12S-**-B-***	26,0	9,3	20,0	17,0	55,0	17,0	7,0	42
VG95234M-14S-*	CA3106E14S-**-B-***	29,2	10,6	22,0	20,0	55,0	17,0	7,0	45
VG95234M-16S-*	CA3106E16S-**-B-***	32,0	13,5	25,0	23,0	60,0	18,0	8,0	55
VG95234M-16-*	CA3106E16-**-B-***	32,0	13,5	25,0	23,0	70,0	18,0	8,0	65
VG95234M-18-*	CA3106E18-**-B-***	36,5	14,6	28,0	24,5	70,0	18,0	8,0	75
VG95234M-20-*	CA3106E20-**-B-***	39,9	18,5	32,0	28,5	70,0	18,0	10,0	85
VG95234M-22-*	CA3106E22-**-B-***	43,1	20,8	34,0	30,5	70,0	18,0	10,0	100
VG95234M-24-*	CA3106E24-**-B-***	46,6	24,6	38,0	34,5	70,0	18,0	10,0	115
VG95234M-28-*	CA3106E28-**-B-***	53,4	27,0	41,0	37,5	70,0	18,0	10,0	130
VG95234M-32-*	CA3106E32-**-B-***	60,1	33,3	48,0	44,0	70,0	18,0	10,0	170
VG95234M-36-*	CA3106E36-**-B-***	66,3	38,5	55,0	51,0	80,0	18,0	10,0	190

[1] Weight without insulator, grommets and contacts.

[2] For max. cable entry.

Wall Mounting Receptacle

VG95234 Style N1 (with threaded holes in flange)
VG95234 Style N2 (with through holes in flange)

CA3100E-B , -13, -14 or **-15, -05-13, -05-14** or **-05-15** designates a shielded receptacle with endbell for shielded braids, and also for heat shrinkable boots

CA3100E-B and Modifications, see page 9

VG95234 Part no.	Cannon Part no.	d_1 -0,15	d_2 Thread H13 N1	d_2 Thread H13 N2	d_3 ±0,5	d_4[2] min.	d_5 max.	e ±0,1	l_1 max.	l_2 +0,4	l_3 ±0,2	l_4 +0,3	Weight[1] g max.
VG95234*XX-10SL-*	CA3100E10SL-**-B-***	18,2	M4	3,2	18,5	7,7	16,3	18,2	55	18,2	2,8	25,4	45
VG95234*XX-14S-*	CA3100E14S-**-B-***	24,6	M4	3,2	22,0	10,6	20,0	23,0	58	18,2	3,2	30,0	55
VG95234*XX-16S-*	CA3100E16S-**-B-***	27,4	M4	3,2	25,0	13,5	23,0	24,6	70	18,2	3,2	32,5	65
VG95234*XX-16-*	CA3100E16-**-B-***	27,4	M4	3,2	25,0	13,5	23,0	24,6	70	21,5	3,2	32,5	75
VG95234*XX-18-*	CA3100E18-**-B-***	30,8	M4	3,2	28,0	14,6	24,5	27,0	70	23,05	4,0	35,0	85
VG95234*XX-20-*	CA3100E20-**-B-***	34,2	M4	3,2	32,0	18,5	28,5	29,4	70	23,05	4,0	38,4	95
VG95234*XX-22-*	CA3100E22-**-B-***	37,4	M4	3,2	34,0	20,8	30,5	31,8	70	23,05	4,0	41,0	105
VG95234*XX-24-*	CA3100E24-**-B-***	40,9	M4	3,7	38,0	24,6	34,5	34,9	70	23,05	4,0	44,5	120
VG95234*XX-28-*	CA3100E28-**-B-***	46,7	M5	3,7	41,0	27,0	37,5	39,7	70	24,05	4,0	50,8	150
VG95234*XX-32-*	CA3100E32-**-B-***	53,4	M5	4,3	48,0	33,3	44,0	44,5	75	24,05	4,0	57,0	190
VG95234*XX-36-*	CA3100E36-**-B-***	59,6	M5	4,3	55,0	38,5	51,0	49,2	85	24,05	4,0	63,5	220

[1] Weight without insulator, grommets and contacts.

[2] For max. cable entry.

Straight Plug

VG95234 Style R1 (for system cable according to MTV6145-005)

CA3106E-B, -32-DXX designates a straight plug, shielded, with endbell for system cable acc. MTV6145-005.

(DXX means cable entry diameter)

CA3106E-B and Modification, see page 9

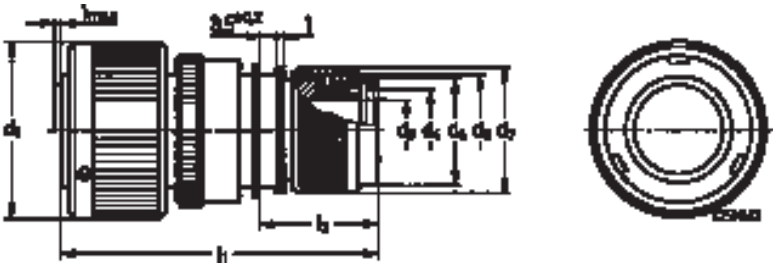

VG95234 Part no.	Cannon Part no.	d_1	d_3	d_4	d_5	d_6	d_7	l_1	l_2	Weight[1] g max.
VG95234R1-14S	CA3106E14S-**-B-32	29,2	10,0	14,0	M 20x1	21,0	23,5	57	21,0	50
VG95234R1-16S	CA3106E16S-**-B-32	32,0	10,0	14,0	M 20x1	21,0	23,5	57	21,0	60
–	CA3106E16S-**-B-32-D12	32,0	12,2	16,0	M 22x1	23,0	25,5	57	21,0	60
VG95234R1-18	CA3106E18-**-B-32	36,5	12,2	16,0	M 22x1	23,0	25,5	66	21,0	80
VG95234R1-20	CA3106E20-**-B-32	39,9	13,4	18,0	M 27x1	26,6	30,5	68	21,0	90
–	CA3106E20-**-B-32-D19	39,9	19,6	22,6	M 27x1	31,5	35,5	68	21,0	90
VG95234R1-28	CA3106E28-**-B-32	53,4	19,0	26,0	M 35x1	37,6	41,5	76	26,0	135
–	CA3106E28-**-B-32-D22	53,4	23,0	26,5	M 35x1	37,6	41,5	76	26,0	135
VG95234R1-32	CA3106E32-**-B-32	60,1	21,0	26,5	M 35x1	37,5	41,5	79	26,0	175
–	CA3106E32-**-B-32-D22	60,3	23,0	26,5	M 35x1	37,5	41,5	82	26,0	200
–	CA3106E36-**-B-32-D22	66,3	23,0	26,5	M 42x1	37,5	41,5	82	26,0	200
–	CA3106E36-**-B-32-D26	66,3	27,0	33,0	M 42x1	45,0	49,7	82	26,0	200

[1] Weight without insulator, grommets and contacts.

Wall Mounting Receptacle

VG95234 Style S1 (with thread holes in flange)

CA3100E-B, -32, -32-05 designates a wall mounting receptacle, shielded, with endbell for system cable acc. MTV 6145-005.

CA3100E-B and Modification, see page 9

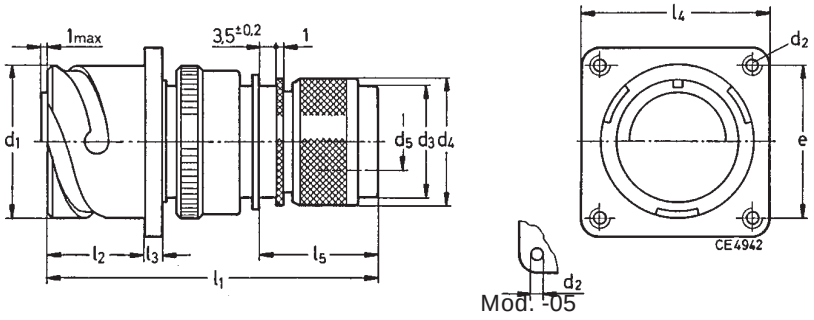

VG95234 Part no.	Cannon Part no.	d_1 −0,15	d_2 Thread	d_2 H13	d_3	d_4 ±0,3	d_5	e ±0,1	l_1 max.	l_2 ±0,4	l_3 ±0,2	l_4 ±0,3	l_5 max.
VG95234S1-14S	CA3100E14S-**-B-***	24,6	M4	3,2	21,0	23,5	10,0	23,0	61	18,2	3,2	30,0	21,0
VG95234S1-16S	CA3100E16S-**-B-***	27,4	M4	3,2	21,0	23,5	10,0	24,6	61	18,2	3,2	32,5	21,0
VG95234S1-18	CA3100E18-**-B-***	30,8	M4	3,2	23,0	25,5	12,2	27,0	70	23,05	4,0	35,0	21,0
VG95234S1-20	CA3100E20-**-B-***	34,2	M4	3,2	26,6	30,5	13,4	29,4	72	23,05	4,0	38,0	21,0
VG95234S1-28	CA3100E28-**-B-***	46,7	M5	3,7	37,5	41,5	19,0	39,7	78	24,05	4,0	50,8	26,0
VG95234S1-32	CA3100E32-**-B-***	53,4	M5	4,3	37,5	41,5	21,0	44,5	81	24,05	4,0	57,0	26,0

Straight Plug, Shielded with Adapter for Heat Shrink Boots

VG95234 Style T

CA3106E-B, 02-41, 03-41, 06-41 designates a straight plug, shielded, with endbell for heat shrink boot.

CA3106E-B and Modification, see page 9

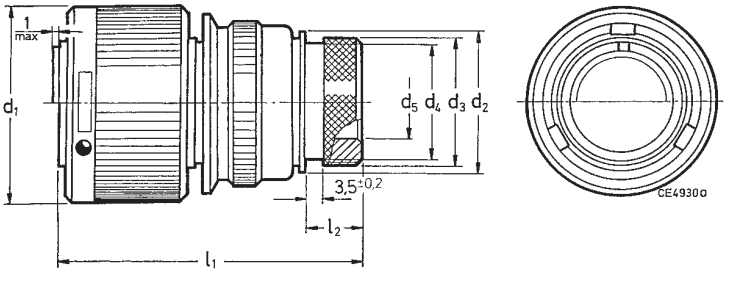

VG 95234 Part no.	Cannon Part no.	d_1 max.	d_2 ±0,2	d_3 ±0,2	d_4 max.	d_5 min.	l_1 max.	l_2 ±0,5	Weight[1] g max.
VG95234T-10SL-*	CA3106E10SL-**B-***	22,8	17,0	15,5	13,3	7,7	50	11,7	24
–	CA3106E12S-**B-***	26,0	17,8	15,5	13,3	7,9	50	11,7	35
VG95234T-14S-*	CA3106E14S-**B-***	29,2	20,1	19,1	17,0	10,6	50	11,7	41
VG95234T-16S-*	CA3106E16S-**B-***	32,0	23,5	23,9	21,9	13,5	50	11,7	51
VG95234T-16-*	CA3106E16-**B-***	32,0	23,5	23,9	21,9	13,5	60	11,7	58
VG95234T-18-*	CA3106E18-**B-***	36,5	26,5	23,9	21,9	14,6	60	11,7	65
VG95234T-20-*	CA3106E20-**B-***	39,9	30,2	29,6	26,2	18,7	65	12,7	75
VG95234T-22-*	CA3106E22-**B-***	43,1	33,6	29,6	26,2	20,8	65	12,7	80
VG95234T-24-*	CA3106E24-**B-***	46,6	38,1	37,8	34,5	24,6	65	12,7	95
VG95234T-28-*	CA3106E28-**B-***	53,4	41,4	37,8	34,5	27,0	65	12,7	120
VG95234T-32-*	CA3106E32-**B-***	60,1	48,6	47,8	43,6	33,3	70	15,2	165
VG95234T-36-*	CA3106E36-**B-***	66,3	54,8	47,8	43,6	38,5	80	15,2	180

[1] Weight without insulator, grommets and contacts.

Wall Mounting Receptacle

VG95234 Style U1 (with threaded holes in flange)
VG95234 Style U2 (with through holes in flange)

CA3100E-B-02-05, -03-05 or **-05-06, -02-03** or **-06** designates a wall mounting receptacle with adapter for heat shrinkable boots

CA3100E-B and Modifications, see page 9

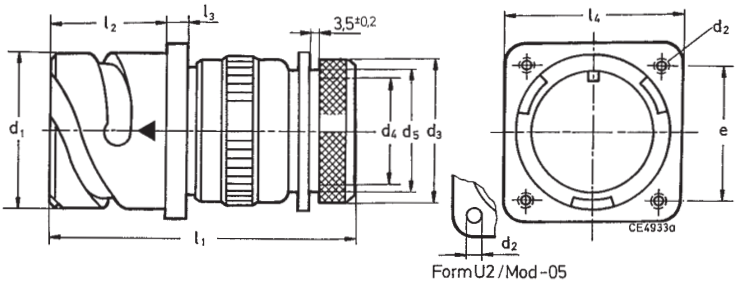

VG95234 Part no.	Cannon Part no.	d_1 -0,15	d_2 Thread	d_2 H13	d_3 ±0,2	d_4	d_5 max.	e ±0,1	l_1 max.	l_2 +0,4	l_3 ±0,2	l_4 ±0,3	Weight[1] g max.
VG95234U1-10SL-*	CA3100E10SL-**-B-***	18,2	M4	3,2	15,5	7,7	13,3	18,2	57	18,2	2,8	25,4	35
–	CA3100E12S-**-B-***	21,4	M4	3,2	15,5	7,9	13,3	20,6	57	18,2	3,2	28,0	45
VG95234U1-14S-*	CA3100E14S-**-B-***	24,6	M4	3,2	19,1	10,6	17,0	23,0	57	18,2	3,2	30,0	50
VG95234U1-16S-*	CA3100E16S-**-B-***	27,4	M4	3,2	23,9	13,5	21,9	24,6	57	18,2	3,2	32,5	60
VG95234U1-16-*	CA3100E16-**-B-***	27,4	M4	3,2	23,9	13,5	21,9	24,6	63	21,5	3,2	32,5	65
VG95234U1-18-*	CA3100E18-**-B-***	30,8	M4	3,2	23,9	14,6	21,9	27,0	65	23,05	4,0	35,0	80
VG95234U1-20-*	CA3100E20-**-B-***	34,2	M4	3,2	29,6	18,7	26,2	29,4	68	23,05	4,0	38,0	95
VG95234U1-22-*	CA3100E22-**-B-***	37,4	M4	3,2	29,6	20,8	26,2	31,8	68	23,05	4,0	41,0	105
VG95234U1-24-*	CA3100E24-**-B-***	40,9	M4	3,7	37,8	24,6	34,5	34,9	70	23,05	4,0	44,5	140
VG95234U1-28-*	CA3100E28-**-B-***	46,7	M5	3,7	37,8	27,0	34,5	39,7	71	24,05	4,0	50,8	160
VG95234U1-32-*	CA3100E32-**-B-***	53,4	M5	4,3	47,8	33,3	43,6	44,5	74	24,05	4,0	57,0	205
VG95234U1-36-*	CA3100E36-**-B-***	59,6	M5	4,3	47,8	38,5	43,6	49,2	74	24,05	4,0	63,5	270

[1] Weight without insulator, grommets and contacts.

Straight Plug

VG95234 Style V

CA3101E-B, -02, -03 or **-06** designates a cable connection plug with adapter for heat shrinkable boots

CA3101E-B and Modifications, see page 9

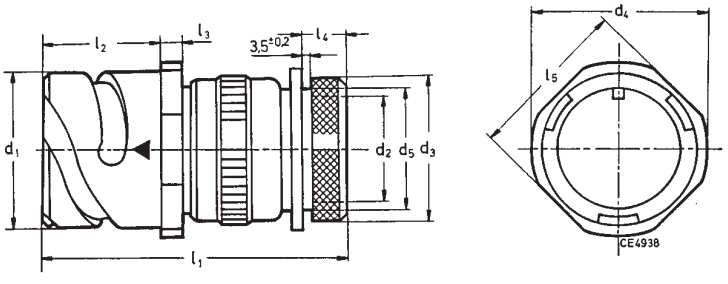

VG95234 Part no.	Cannon Part no.	d_1 -0,15	d_2[2] min.	d_3 ±0,2	d_4 max.	d_5 max.	l_1 max.	l_2 +0,4	l_3 ±0,2	l_4 ±0,5	l_5	Weight[1] g max.
VG95234V-10SL-*	CA3101E10SL-**-B-***	18,2	7,7	15,5	25,2	13,3	57	18,2	2,8	11,7	20,6	35
	CA3101E12S-**-B-***	21,4	7,9	15,5	27,8	13,3	57	18,2	3,2	11,7	23,6	45
VG95234V-14S-*	CA3101E14S-**-B-***	24,6	10,6	19,1	29,8	17,0	57	18,2	3,2	11,7	25,4	50
VG95234V-16S-*	CA3101E16S-**-B-***	27,4	13,5	23,9	32,3	21,9	57	18,2	3,2	11,7	28,6	60
VG95234V-16-*	CA3101E16-**-B-***	27,4	13,5	23,9	32,3	21,9	63	21,5	3,2	11,5	28,6	65
VG95234V-18-*	CA3101E18-**-B-***	30,8	14,6	23,9	34,8	21,9	65	23,05	4,0	11,5	31,7	80
VG95234V-20-*	CA3101E20-**-B-***	34,2	18,7	29,6	37,8	26,2	68	23,05	4,0	12,7	34,9	95
VG95234V-22-*	CA3101E22-**-B-***	37,4	20,8	29,6	41,1	26,2	68	23,05	4,0	12,7	38,1	105
VG95234V-24-*	CA3101E24-**-B-***	40,9	24,6	37,8	44,6	34,5	70	23,05	4,0	12,7	41,3	140
VG95234V-28-*	CA3101E28-**-B-***	46,7	27,0	37,8	50,9	34,5	71	24,05	4,0	12,7	47,6	160
VG95234V-32-*	CA3101E32-**-B-***	53,4	33,3	47,8	57,1	43,6	74	24,05	4,0	15,2	54,0	205
VG95234V-36-*	CA3101E36-**-B-***	59,6	38,5	47,8	63,6	43,6	74	24,05	4,0	15,2	60,6	270

[1] Weight without insulator, grommets and contacts. [2] For max. cable entry.

Dimensions shown in mm
Specifications and dimensions subject to change

Wall Mounting Receptacle

CA3100E-B-08 (Flange with threated holes)
CA3100E-B-09 (Flange with through holes)

CA3100E-B-08, -09 designates a wall mounting receptacle, with 90° endbell, cable clamp and telescoping bushing.

Modification see page 9

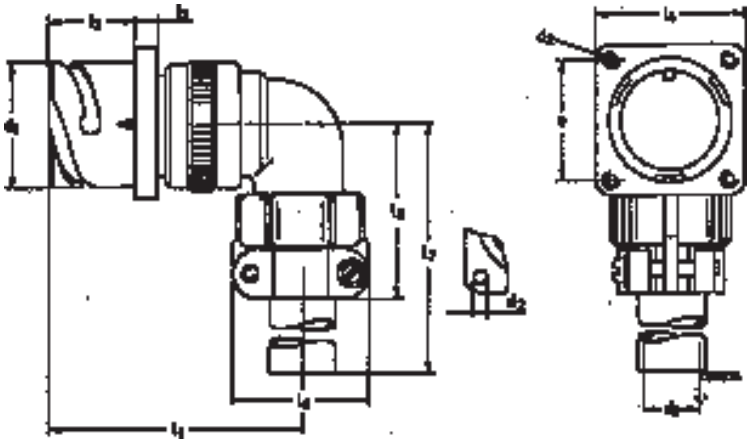

Cannon Part no.	d_1 -0,15	d_2 Thread Mod. 08	d_2 H13 Mod. 09	d_3[2] max.	e ±0,4	l_1 max.	l_2 +0,4	l_3 ±0,2	l_4 max.	l_5 max.	l_6 max.	l_7 max.	Weight[1] g max.
CA3100E10SL-**-B-***	18,2	M4	3,2	6,5	18,2	50	18,2	2,8	25,4	42	22,7	100	50
CA3100E12S-**-B-***	21,4	M4	3,2	6,5	20,6	50	18,2	3,2	28,0	42	22,7	100	60
CA3100E14S-**-B-***	24,6	M4	3,2	9,0	23,0	52	18,2	3,2	30,0	42	27,5	100	70
CA3100E16S-**-B-***	27,4	M4	3,2	11,0	24,6	53	18,2	3,2	32,5	45	30,0	100	80
CA3100E16-**-B-***	27,4	M4	3,2	11,0	24,6	60	21,5	3,2	32,5	45	30,0	100	90
CA3100E18-**-B-***	30,8	M4	3,2	14,2	27,0	62	23,05	4,0	35,0	53	33,0	100	100
CA3100E20-**-B-***	34,2	M4	3,2	15,8	29,4	66	23,05	4,0	38,0	53	37,5	100	120
CA3100E22-**-B-***	37,4	M4	3,2	15,8	31,8	66	23,05	4,0	41,0	53	37,5	100	130
CA3100E24-**-B-***	40,9	M4	3,7	21,4	34,9	69	23,05	4,0	44,5	58	43,3	100	170
CA3100E28-**-B-***	46,7	M5	3,7	21,4	39,7	70	24,05	4,0	50,8	58	43,3	100	200
CA3100E32-**-B-***	53,4	M5	4,3	26,7	44,5	74	24,05	4,0	57,0	66	51,7	110	265
CA3100E36-**-B-***	59,6	M5	4,3	31,7	49,2	78	24,05	4,0	63,5	69	58,0	110	325

[1] Weight without insulator, grommets and contacts.

[2] For max. cable entry.

Wall Mounting Receptacle

CA3100F-B-08 (Flange with threated holes)
CA3100F-B-09 (Flange with through holes)

CA3100F-B, -08, -09 designates a wall mounting receptacle with 90° endbell and for protective hose

Modifications see page 9

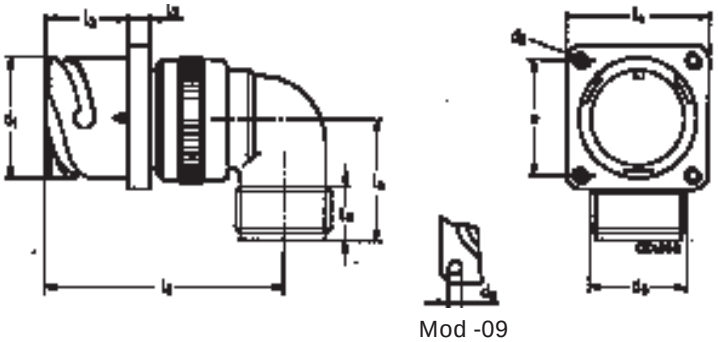

Mod -09

Cannon Part no.	d_1 -0,15	d_2 Thread	d_2 H13	d_3 Thread	e ±0,1	l_1 max.	l_2 +0,4	l_3 ±0,2	l_4 ±0,3	l_5 min.	l_6 max.	Weight[1] g max.
CA3100F10SL-**-B-***	18,2	M4	3,2	5/8-24UNEF-2A	18,2	50	18,2	2,8	25,4	9,4	30	47
CA3100F12S-**-B-***	21,4	M4	3,2	5/8-24UNEF-2A	20,6	50	18,2	3,2	28,0	9,4	30	57
CA3100F14S-**-B-***	24,6	M4	3,2	3/4-20UNEF-2A	23,0	52	18,2	3,2	30,0	9,4	30	57
CA3100F16S-**-B-***	27,4	M4	3,2	7/8-20UNEF-2A	24,6	53	18,2	3,2	32,5	9,4	30	75
CA3100F16-**-B-***	27,4	M4	3,2	7/8-20UNEF-2A	24,6	60	21,5	3,2	32,5	9,4	30	85
CA3100F18-**-B-***	30,8	M4	3,2	1-20UNEF-2A	27,0	62	23,05	4,0	35,0	9,4	35	95
CA3100F20-**-B-***	34,2	M4	3,2	1 3/16-18UNEF-2A	29,4	66	23,05	4,0	38,0	9,4	35	115
CA3100F22-**-B-***	37,4	M4	3,2	1 3/16-18UNEF-2A	31,8	66	23,05	4,0	41,0	9,4	35	125
CA3100F24-**-B-***	40,9	M4	3,7	1 7/16-18UNEF-2A	34,9	69	23,05	4,0	44,5	9,4	40	160
CA3100F28-**-B-***	46,7	M5	3,7	1 7/16-18UNEF-2A	39,7	70	24,05	4,0	50,8	9,4	40	190
CA3100F32-**-B-***	53,4	M5	4,3	1 3/4-18UNS-2A	44,5	74	24,05	4,0	57,0	11,0	45	250
CA3100F36-**-B-***	59,6	M5	4,3	2-18UNS-2A	49,2	78	24,05	4,0	63,5	12,6	50	310

[1] Weight without insulator, grommets and contacts.

Wall Mounting Receptacles

CA3100R-B designates a wall mounting receptacle with short endbell without cable clamp.

CA3100R-B and Modifications, see page 9

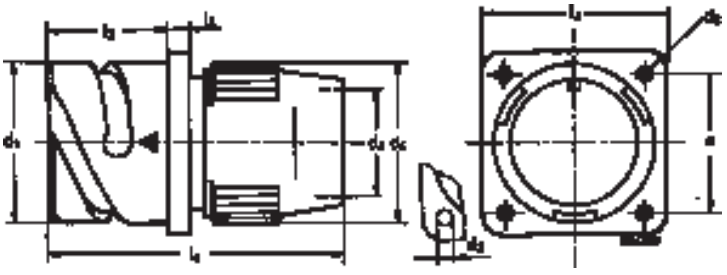

Mod -05

Cannon Part no.	d_1 -0,15	d_2 Thread	d_2 H13	d_3[2] min.	d_4 max.	e ±0,1	l_1 max.	l_2 +0,4	l_3 ±0,2	l_4 ±0,3	Weight[1] g max.
CA3100R10SL-**-B-***	18,2	M4	3,2	9,6	22,0	18,2	50	18,2	2,8	25,4	40
CA3100R12S-**-B-***	21,4	M4	3,2	10,3	23,0	20,6	52	18,2	3,2	28,0	50
CA3100R14S-**-B-***	24,6	M4	3,2	12,4	27,0	23,0	52	18,2	3,2	30,0	60
CA3100R16S-**-B-***	27,4	M4	3,2	15,4	28,0	24,6	58	18,2	3,2	32,5	70
CA3100R16-**-B-***	27,4	M4	3,2	15,4	28,0	24,6	58	21,5	3,2	32,5	75
CA3100R18-**-B-***	30,8	M4	3,2	18,4	31,0	27,0	65	23,05	4,0	35,0	90
CA3100R20-**-B-***	34,2	M4	3,2	22,0	35,0	29,4	65	23,05	4,0	38,0	110
CA3100R22-**-B-***	37,4	M4	3,2	24,7	38,0	31,8	65	23,05	4,0	41,0	125
CA3100R24-**-B-***	40,9	M4	3,7	27,6	42,0	34,9	67	23,05	4,0	44,5	160
CA3100R28-**-B-***	46,7	M5	3,7	31,6	49,0	39,7	67	24,05	4,0	50,8	190
CA3100R32-**-B-***	53,4	M5	4,3	38,5	55,0	44,5	67	24,05	4,0	57,0	230
CA3100R36-**-B-***	59,6	M5	4,3	44,5	62,0	49,2	67	24,05	4,0	63,5	300

[1] Weight without insulator, grommets and contacts.

[2] For max. cable entry.

Straight Plug

CA3101F-B - designates a cable connection plug for flex tube

CA3101F-B and Modifications, see page 9

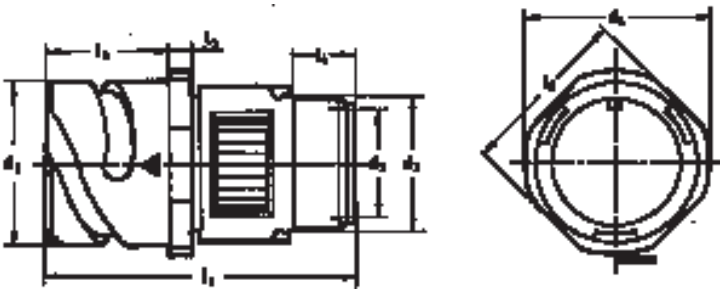

Cannon Part no.	d_1 -0,15	d_2[2] min.	d_3 Thread	d_4 max.	l_1 max.	l_2 +0,4	l_3 ±0,2	l_4 min.	l_5 ±0,2	Weight[1] g max.
CA3101F10SL-**-B-***	18,2	8,2	5/8-24NEF-2A	25,2	52	18,2	2,8	9,5	20,6	35
CA3101F12S-**-B-***	21,4	8,2	5/8-24NEF-2A	27,8	52	18,2	3,2	9,5	23,6	45
CA3101F14S-**-B-***	24,6	11,1	3/4-20UNEF-2A	29,8	52	18,2	3,2	9,5	25,4	50
CA3101F16S-**-B-***	27,4	14,3	7/8-20UNEF-2A	32,3	59	18,2	3,2	9,5	28,6	60
CA3101F16-**-B-***	27,4	14,3	7/8-20UNEF-2A	32,3	59	21,5	3,2	9,5	28,6	65
CA3101F18-**-B-***	30,8	16,7	1-20UNEF-2A	34,8	63	23,05	4,0	9,5	31,7	80
CA3101F20-**-B-***	34,2	19,8	1 3/16-18UNEF-2A	37,8	63	23,05	4,0	9,5	34,9	95
CA3101F22-**-B-***	37,4	19,8	1 3/16-18UNEF-2A	41,1	66	23,05	4,0	9,5	38,1	105
CA3101F24-**-B-***	40,9	25,4	1 7/16-18UNEF-2A	44,6	69	23,05	4,0	9,5	41,3	140
CA3101F28-**-B-***	46,7	27,0	1 7/16-18UNEF-2A	50,9	70	24,05	4,0	9,5	47,6	160
CA3101F32-**-B-***	53,4	32,5	1 3/4-16UNS-2A	57,1	71	24,05	4,0	11,0	54,0	205
CA3101F36-**-B-***	59,6	35,7	2-18UNS-2A	63,6	73	24,05	4,0	11,8	60,6	270

[1] Weight without insulator, grommets and contacts.

[2] For max. cable entry.

Wall Mounting Receptacle

CA3100F-B designates a wall mounting receptacle with straight endbell and protective hose.

CA3100F-B and Modifications, see page 9

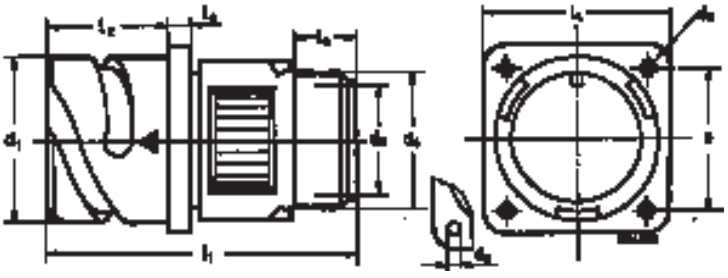

Mod -05

Cannon Part no.	d_1 -0,15	d_2 Thread	d_2 +0,2	d_3[2]	d_4 Thread	e ±0,1	l_1 max.	l_2 +0,4	l_3 ±0,2	l_4 ±0,3	l_5 min.	Weight[1] g max.
CA3100F10SL-**-B-***	18,2	M4	3,2	8,2	5/8-24NEF-2A	18,2	52	18,2	2,8	25,4	9,5	40
CA3100F12S-**-B-***	21,4	M4	3,2	8,2	5/8-24NEF-2A	20,6	52	18,2	3,2	28,0	9,5	50
CA3100F14S-**-B-***	24,5	M4	3,2	11,1	3/4-20UNEF-2A	23,0	52	18,2	3,2	30,0	9,5	60
CA3100F16S-**-B-***	27,4	M4	3,2	14,3	7/8-20UNEF-2A	24,6	59	18,2	3,2	32,5	9,5	70
CA3100F16-**-B-***	27,4	M4	3,2	14,3	7/8-20UNEF-2A	24,6	59	21,5	3,2	32,5	9,5	75
CA3100F18-**-B-***	30,8	M4	3,2	16,7	1-20UNEF-2A	27,0	63	23,05	4,0	35,0	9,5	90
CA3100F20-**-B-***	34,2	M4	3,2	19,8	1 3/16-18UNEF-2A	29,4	63	23,05	4,0	38,0	9,5	110
CA3100F22-**-B-***	37,4	M4	3,2	19,8	1 3/16-18UNEF-2A	31,8	66	23,05	4,0	42,0	9,5	125
CA3100F24-**-B-***	40,9	M4	3,7	25,4	1 7/16-18UNEF-2A	34,9	69	23,05	4,0	44,5	9,5	160
CA3100F28-**-B-***	46,7	M5	3,7	27,0	1 7/16-18UNEF-2A	39,7	70	24,05	4,0	50,8	9,5	190
CA3100F32-**-B-***	53,4	M5	4,3	32,5	1 3/4-18UNS-2A	44,5	71	24,05	4,0	57,0	11,0	230
CA3100F36-**-B-***	59,6	M5	4,3	35,7	2-18UNS-2A	49,2	73	24,05	4,0	63,5	11,8	300

[1] Weight without insulator, grommets and contacts.

[2] For max. cable entry.

Straight Plug

CA3101R-B designates a cable connection plug with short endbell, without cable clamp

CA3101R-B and Modification, see page 9

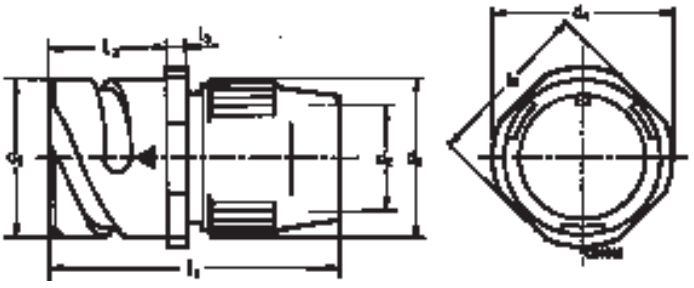

Cannon Part no.	d_1 -0,15	d_2 min.	d_3 max.	d_4 max.	l_1 max.	l_2 +0,4	l_3 ±0,2	l_5 ±0,2	Weight[1] g max.
CA3101R10SL-**-B-***	18,2	9,6	22,0	25,2	50	18,2	2,8	20,6	32
CA3101R12S-**-B-***	21,4	10,3	23,0	27,8	52	18,2	3,2	23,6	40
CA3101R14S-**-B-***	24,6	12,4	27,0	29,8	52	18,2	3,2	25,4	47
CA3101R16S-**-B-***	27,4	15,4	28,0	32,3	58	18,2	3,2	28,6	55
CA3101R16-**-B-***	27,4	15,4	28,0	32,3	58	21,5	3,2	28,6	60
CA3101R18-**-B-***	30,8	18,4	31,0	34,8	65	23,05	4,0	31,7	75
CA3101R20-**-B-***	34,2	22,0	35,0	37,8	65	23,05	4,0	34,9	90
CA3101R22-**-B-***	37,4	24,7	38,0	41,1	65	23,05	4,0	38,1	100
CA3101R24-**-B-***	40,9	27,6	42,0	44,6	67	23,05	4,0	41,3	135
CA3101R28-**-B-***	46,7	31,6	49,0	50,9	67	24,05	4,0	47,6	155
CA3101R32-**-B-***	53,4	38,5	55,0	57,1	67	24,05	4,0	54,0	200
CA3101R36-**-B-***	59,6	44,5	62,0	63,6	67	24,05	4,0	60,6	260

[1] Weight without insulator, grommets and contacts.

Straight Plug

CA3106R-B designates a straight plug with short endbell, without cable clamp

CA3106R-B and Modification, see page 9

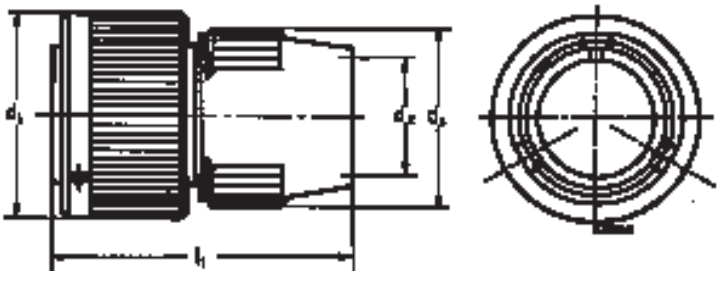

Cannon Part no.	d_1 max.	d_2[1]	d_3 max.	l_1 max.	Weight g max.
CA3106R10SL-**-B-***	22,8	9,6	22,0	50	27
CA3106R12S-**-B-***	26,0	10,3	23,0	50	35
CA3106R14S-**-B-***	29,2	12,4	27,0	50	40
CA3106R16S-**-B-***	32,0	15,4	28,0	50	50
CA3106R16-**-B-***	32,0	15,4	28,0	60	57
CA3106R18-**-B-***	36,5	18,4	31,0	62	65
CA3106R20-**-B-***	39,9	22,0	35,0	62	80
CA3106R22-**-B-***	43,1	24,7	38,0	62	87
CA3106R24-**-B-***	46,6	27,6	42,0	62	120
CA3100R28-**-B-***	53,4	31,6	49,0	62	150
CA3106R32-**-B-***	60,1	38,5	55,0	62	190
CA3106R36-**-B-***	66,3	44,5	62,0	62	250

[1] For max. cable entry.

Dimensions shown in mm
Specifications and dimensions subject to change

Jam Nut Receptacle

CA07A-B

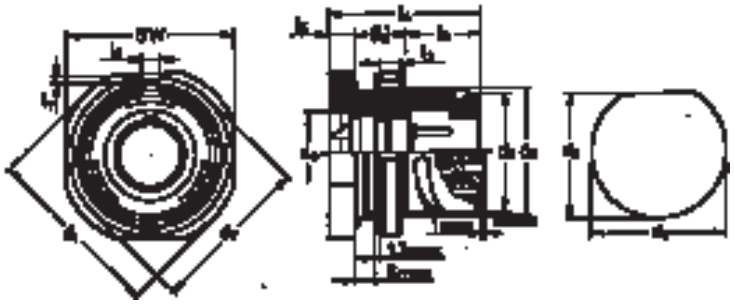

Cannon Part no.	d_1	d_2	d_3 Thread	(l_1)	l_2	l_3	l_4	d_4	d_5	d_6	d_7	sw	d_8	l_5	l_6	l_7
CA07A10SL-**B-***	35,0	8,2	7/8-20UNEF-2A	13,5	12,5	4,0	29,2	22,7	20,9	13,5	31,5	31,8	20,6	3,2	5,0	2,5
CA07A12S-**B-***	38,1	8,2	1-20UNEF-2A	13,5	12,5	4,0	29,2	25,7	24,1	14,8	34,7	34,9	23,8	3,2	5,0	2,5
CA07A14S-**B-***	41,3	11,1	1 1/8-18UNEF-2A	13,5	12,5	4,0	29,2	28,8	27,2	17,9	37,9	38,1	26,9	3,2	6,0	2,5
CA07A16S-**B-***	44,4	14,3	1 1/4-18UNEF-2A	13,5	12,5	4,0	29,2	32,0	30,4	21,1	41,0	41,2	30,1	3,2	6,0	2,5
CA07A16-**B-***	44,4	14,3	1 1/4-18UNEF-2A	13,5	21,0	4,0	37,7	32,0	30,4	21,1	41,0	41,2	30,1	3,2	6,0	2,5
CA07A18-**B-***	48,2	16,7	1 3/8-18UNEF-2A	15,0	21,0	5,0	40,0	35,1	33,6	24,2	44,8	45,0	33,3	4,0	7,0	3,0
CA07A20-**B-***	52,4	19,8	1 1/2-18UNEF-2A	15,0	21,0	5,0	40,0	38,2	36,8	28,2	49,0	49,2	36,5	4,0	7,0	3,0
CA07A22-**B-***	55,5	19,8	1 5/8-18UNEF-2A	15,0	21,0	5,0	40,0	42,0	39,9	31,4	52,2	52,4	39,6	4,0	7,0	3,0
CA07A24-**B-***	59,0	25,4	1 3/4-18UNEF-2A	15,0	21,0	5,0	40,0	44,7	43,1	34,5	55,0	55,2	41,2	4,0	7,0	3,0
CA07A28-**B-***	66,0	27,0	2-18UNEF-2A	15,0	21,0	5,0	40,0	51,1	49,2	40,1	62,0	62,2	47,5	4,0	7,0	3,0
CA07A32-**B-***	72,0	32,5	2 1/4-16UN-2A	15,0	21,0	5,0	40,0	57,4	55,7	46,5	68,0	68,2	54,1	4,0	7,0	3,0
CA07A36-**B-***	80,0	35,7	1/2-16UN-2A	15,0	21,0	5,0	40,0	63,8	62,0	51,2	75,0	75,2	60,5	4,0	8,0	3,0

Straight Plug with PG Adapter

CA06PG-B

CA0GME-B

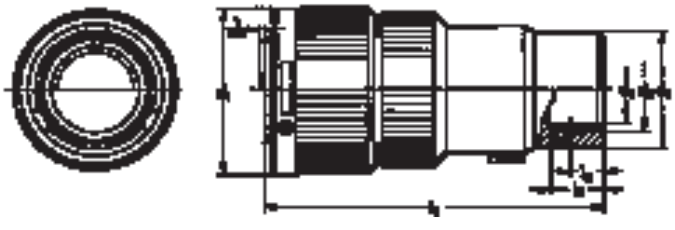

Cannon Part no.	d_1	d_3	d_4	l_1	l_2	l_3	d_2 PG-Thread
CA06PG10SL-**-B-***	22,8	18,0	9,7	52	9,5	7,0	PG 9
CA06PG12S-**-B-***	26,0	18,8	10,4	52	9,5	7,0	PG 9
CA06PG14S-**-B-***	29,2	22,0	12,5	52	10,0	7,0	PG11
CA06PG16S-**-B-***	32,0	23,6	15,0	54	10,0	7,0	PG13,5
CA06PG16-**-B-***	32,0	24,0	15,0	64	10,0	7,0	PG13,5
CA06PG18-**-B-***	36,5	24,4	17,0	69	11,5	7,5	PG13,5
CA06PG20-**-B-***	39,9	26,8	17,0	70	11,5	7,5	PG16
CA06PG22-**-B-***	42,1	26,4	17,0	73	11,5	7,5	PG16
CA06PG24-**-B-***	46,6	26,8	18,5	74	12,5	7,5	PG16
CA06PG28-**-B-***	53,4	32,0	18,5	74	12,5	7,5	PG21
CA06PG32-**-B-***	60,1	40,8	24,0	76	13,5	8,5	PG29
CA06PG36-**-B-***	66,3	40,8	32,0	87	15,0	9,0	PG29

Cannon Part no.	d_1	d_3	d_4	l_1	l_2	l_3	d_2 Metric
CA06ME10SL-**-B-***	22,8	18,0	9,7	52	9,5	7,0	M16 X 1,5
CA06ME12S-**-B-***	26,0	18,8	10,4	52	9,5	7,0	M16 X 1,5
CA06ME14S-**-B-***	29,2	22,0	12,5	52	10,0	7,0	M20 X 1,5
CA06ME16S-**-B-***	32,0	23,6	15,0	54	10,0	7,0	M20 X 1,5
CA06ME16-**-B-***	32,0	24,0	15,0	64	10,0	7,0	M20 X 1,5
CA06ME18-**-B-***	36,5	24,4	17,0	69	11,5	7,5	M25 X 1,5
CA06ME20-**-B-***	39,9	26,8	17,0	70	11,5	7,5	M25 X 1,5
CA06ME22-**-B-***	42,1	26,4	17,0	73	11,5	7,5	M32 X 1,5
CA06ME24-**-B-***	46,6	26,8	18,5	74	12,5	7,5	M32 X 1,5
CA06ME28-**-B-***	53,4	32,0	18,5	74	12,5	7,5	upon request
CA06ME32-**-B-***	60,1	40,8	24,0	76	13,5	8,5	upon request
CA06ME36-**-B-***	66,3	40,8	32,0	87	15,0	9,0	upon request

Coupling Dimensions

for connector style A, B1, B2, C1, C2, F, J1, J2, N1 and N2 resp. CA3100, CA3101, CA3102 and TBF

A = Contact size 10
B = Contact size 15S, 15, 16S, 16
C = Contact size 25, 12
D = Contact size 60, 100, 160, 500, 8.4, 0
E = Contact size 10
F = Contact size 15S, 16S
G = all others

Shell size	d_1 -0,15	d_2 +0,3	d_3	d_4 +0,4	d_5 +0,8	l_1 min.	l_2 ±1 A-1	B±1	C±1	D	l_3 ±0,5	l_4 ±1 E	F	G	l_5 +0,2	l_6 +0,4	l_7 +0,1 -0,05
10SL	18,2	11,4	$9{,}7^{+0{,}25}_{-0{,}3}$	2,75	2,75	14,2	–	2,2	–	–	12,8	–	2	–	1,8	4,4	6,3
12S	21,4	14,2	$10{,}8^{+0{,}25}_{-0{,}3}$	2,75	2,75	14,2	–	2,2	–	–	12,8	–	2	–	1,8	5,9	6,3
14S	24,6	17,3	$13{,}0^{+0{,}25}_{-0{,}3}$	2,75	2,75	14,2	–	2,2	–	–	12,8	–	2	–	1,8	6,9	6,3
16S	27,4	20,6	$16{,}1^{+0{,}25}_{-0{,}3}$	2,75	2,75	14,2	–	2,2	–	–	12,8	–	2	–	1,8	8,4	6,3
16	27,4	20,6	$16{,}1^{+0{,}25}_{-0{,}3}$	4,65	4,65	19	9,8	6,6	3	2,3	17,6	1,4	–	2,6	1,8	8,4	9,6
18	30,8	23,8	$18{,}8^{\pm 0{,}4}$	4,65	4,65	19	9,8	6,6	3	2,3	17,6	1,4	–	2,6	2,0	9,7	9,6
20	34,2	26,9	$22{,}6^{\pm 0{,}4}$	4,65	4,65	19	9,8	6,6	3	2,3	17,6	1,4	–	2,6	2,0	11,7	9,6
22	37,4	30,0	$25{,}1^{\pm 0{,}4}$	4,65	4,65	19	9,8	6,6	3	2,3	17,6	1,4	–	2,6	2,0	12,9	9,6
24	40,9	33,2	$28{,}2^{\pm 0{,}4}$	4,65	4,65	19	9,8	6,6	3	2,3	17,6	1,4	–	2,6	2,0	14,5	9,6
28	46,7	38,8	$33{,}6^{\pm 0{,}4}$	4,65	4,65	19	9,8	6,6	3	2,3	17,6	1,4	–	2,6	2,0	17,3	9,6
32	53,4	45,2	$40{,}0^{\pm 0{,}4}$	4,65	4,65	19	9,8	6,6	3	2,3	17,6	1,4	–	2,6	2,0	20,4	9,6
36	59,6	50,6	$45{,}5^{\pm 0{,}4}$	4,65	4,65	19	9,8	6,6	3	2,3	17,6	1,4	–	2,6	2,0	23,0	9,6

Coupling Dimensions

for connector style D, E, E1, G and H resp. CA3106 und 3108

A = Contact size 10
B = Contact size 15S, 15, 16S, 16
C = Contact size 25, 12
D = Contact size 60, 100, 160, 500, 8, 4, 0
E = Contact size 10
F = Contact size 15S, 16S
G = all others

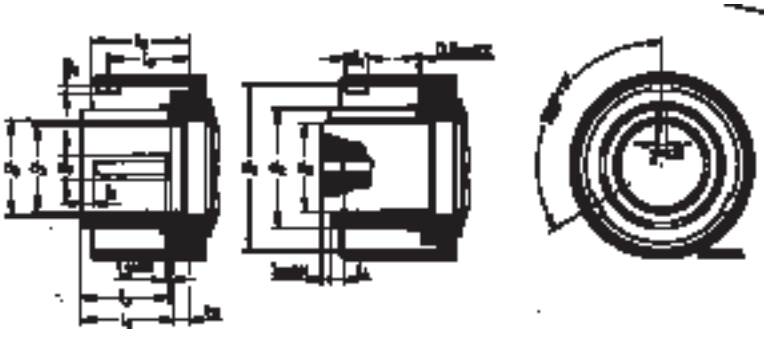

Shell size	d_1 -0,15	d_2 -0,3	d_3	d_4 -0,1	d_6	l_1 ±0,2	l_2 ±1 A	B	C	D	l_3[1] ±0,5	l_4 ±1 E	F	G	l_5 +0,05 -0,1	l_8 ±1	l_9 ±0,5	l_{10} +0,1 -0,05
10SL	18,2	11,3	$9{,}7^{+0{,}25}_{-0{,}3}$	2,6	$10{,}0^{+0{,}3}$	13,5	–	2,2	–	–	12,8	–	2	–	1,6	11,8	14	2,1
12S	21,4	14,0	$10{,}8^{+0{,}25}_{-0{,}3}$	2,6	$11{,}4^{+0{,}6}$	13,5	–	2,2	–	–	12,8	–	2	–	1,6	11,8	14	2,1
14S	24,8	17,1	$13{,}0^{+0{,}25}_{-0{,}3}$	2,6	$13{,}3^{+0{,}6}$	13,5	–	2,2	–	–	12,8	–	2	–	1,6	11,8	14	2,1
16S	27,6	20,4	$16{,}1^{+0{,}25}_{-0{,}3}$	2,6	$16{,}4^{+0{,}6}$	13,5	–	2,2	–	–	12,8	–	2	–	1,6	11,8	14	2,1
16	27,6	20,4	$16{,}1^{+0{,}25}_{-0{,}3}$	4,5	$16{,}4^{+0{,}6}$	18,2	9,8	6,6	3	2,3	17,6	1,4	–	2,6	1,6	16,0	18,8	2,1
18	31,1	23,6	$18{,}8^{\pm 0{,}4}$	4,5	$19{,}6^{+0{,}6}$	18,2	9,8	6,6	3	2,3	17,6	1,4	–	2,6	1,8	16,0	18,8	2,1
20	34,5	26,7	$22{,}6^{\pm 0{,}4}$	4,5	$23{,}6^{+0{,}6}$	18,2	9,8	6,6	3	2,3	17,6	1,4	–	2,6	1,8	16,0	18,8	2,1
22	37,7	29,8	$25{,}1^{\pm 0{,}4}$	4,5	$26{,}0^{+0{,}6}$	18,2	9,8	6,6	3	2,3	17,6	1,4	–	2,6	1,8	16,0	18,8	2,1
24	41,2	33,0	$28{,}2^{\pm 0{,}4}$	4,5	$29{,}1^{+0{,}7}$	18,2	9,8	6,6	3	2,3	17,6	1,4	–	2,6	1,8	16,8	19,6	2,8
28	47,0	38,6	$33{,}6^{\pm 0{,}4}$	4,5	$34{,}7^{+0{,}7}$	18,2	9,8	6,6	3	2,3	17,6	1,4	–	2,6	1,8	16,8	19,6	2,8
32	53,7	44,9	$40{,}0^{\pm 0{,}4}$	4,5	$41{,}0^{+0{,}7}$	18,2	9,8	6,6	3	2,3	17,6	1,4	–	2,6	1,8	16,8	19,6	2,8
36	59,9	50,3	$45{,}5^{\pm 0{,}4}$	4,5	$46{,}6^{+0{,}7}$	19	9,8	6,6	3	2,3	17,6	1,4	–	2,6	1,8	16,8	19,6	2,8

[1] In terminated condition

Dimensions shown in mm
Specifications and dimensions subject to change

Mating Dimensions

for shell styles K, L and M, shown without coupling nut

Size	d_8 min.	Size	d_8 min.
14S	17,9	22	30,7
16S	21,2	24	33,9
16	21,2	28	39,5
18	24,4	32	46,0
20	27,6	36	51,4

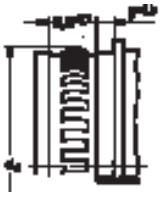

Plastic Protecting Caps

Colour: red
(similar to RAL 2003)

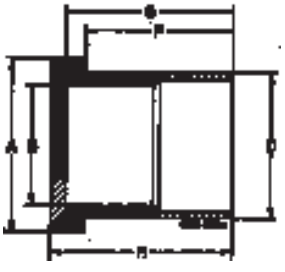

Part no.	Protecting cap for Receptacles Shell size	Plugs Shell size	ø A max.	ø B -0,2	ø D +0,2	F ±0,2	G ±0,2	H max.
025-8636-005	10S/10SL	–	22,8	17,7	19,7	10,7	14,2	15,9
025-8636-006	–	10S/10SL	22,8	10,7	12,9	15,5	17,0	18,7
025-8636-008	–	12S	26,0	13,4	15,8	15,5	17,0	18,7
025-8636-010	12S/12	–	26,0	20,9	22,9	10,7	14,2	15,9
025-8636-016	14S/14	–	29,2	24,1	26,1	10,7	14,2	15,9
025-8636-017	–	14S	29,2	16,5	19,1	15,5	17,0	18,7
025-8636-018	–	14	29,2	16,5	19,1	20,2	21,7	23,4
025-8636-022	–	16S	32,0	19,8	22,4	15,5	17,0	18,7
025-8636-024	–	16	32,0	19,8	22,4	20,2	21,7	23,4
025-8636-025	16S	–	32,0	26,9	28,9	10,7	14,2	15,9
025-8636-026	16	–	32,0	26,9	28,9	17,5	19,0	20,7
025-8636-034	18	–	36,5	30,3	32,3	17,5	19,0	20,7
025-8636-036	–	18	36,5	23,0	25,6	20,2	21,7	23,4
025-8636-042	20	–	39,9	33,7	35,7	17,5	19,0	20,7
025-8636-044	–	20	39,9	26,1	28,8	20,2	21,7	23,4
025-8636-048	–	22	43,1	29,2	31,9	20,2	21,7	23,4
025-8636-049	22	–	43,1	36,9	38,9	17,5	19,0	20,7
025-8636-053	24	–	46,6	40,4	42,4	19,1	20,6	22,3
025-8636-054	–	24	46,6	32,4	35,1	20,2	21,7	23,4
025-8636-058	28	–	53,4	46,2	48,2	19,1	20,6	22,3
025-8636-060	–	28	53,4	38,0	40,7	20,2	21,7	23,4
025-8636-061	–	32	60,1	44,3	47,2	20,2	21,7	23,4
025-8636-062	32	–	64,9	52,9	54,9	20,7	22,2	23,9
025-8636-064	36	–	71,1	59,1	60,1	20,7	22,2	23,9
025-8636-065	–	36	66,3	49,7	51,6	20,2	21,7	23,4

Metal Protecting Caps

for receptacles, shell style
3100, 3101 und 3102
Material: Aluminum alloy

VG95234 Style KA with cord

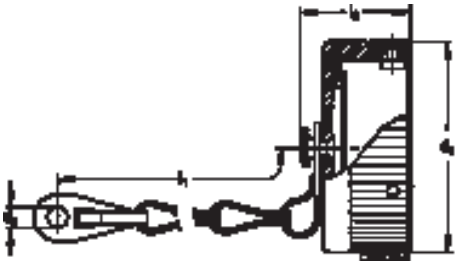

VG95234 Style KR with chain

Shell size	VG95234 Part no. with chain	VG95234 Part no. with cord	Cannon Part no. with chain	Cannon Part no. with cord	d_1 max.	d_2 +0,6	l_1 min. f. chain	l_2 max.	Weight g max.
10SL	VG95234KR10SL	VG95234KA10SL	CA121003-1	CAB81-10SL-D	23,5	4,3	90	20	16
12S	–	–	CA121003-2	CAB81-12S-D	27,0	4,3	90	20	17
14S	VG95234KR14S	VG95234KA14S	CA121003-3	CAB81-14S-D	30,5	4,3	90	20	18
16S	VG95234KR16S	VG95234KA16S	CA121003-4	CAB81-16S-D	33,0	4,3	90	20	19
16	VG95234KR16	VG95234KA16	CA121003-5	CAB81-16-D	33,0	4,3	100	25	23
18	VG95234KR18	VG95234KA18	CA121003-6	CAB81-18-D	37,5	4,3	100	25	27
20	VG95234KR20	VG95234KA20	CA121003-7	CAB81-20-D	41,0	4,3	115	25	30
22	VG95234KR22	VG95234KA22	CA121003-8	CAB81-22-D	44,0	4,3	115	25	33
24	VG95234KR24	VG95234KA24	CA121003-9	CAB81-24-D	47,5	4,3	115	25	37
28	VG95234KR28	VG95234KA28	CA121003-10	CAB81-28-D	54,5	5,5	160	25	42
32	VG95234KR32	VG95234KA32	CA121003-11	CAB81-32-D	61,0	5,5	160	25	48
36	VG95234KR36	VG95234KA36	CA121003-12	CAB81-36-D	67,5	5,5	160	25	55

Metal Protecting Caps

for plugs, shell style
3106 and 3108
Material: Aluminum alloy

VG95234 Style KC with cord

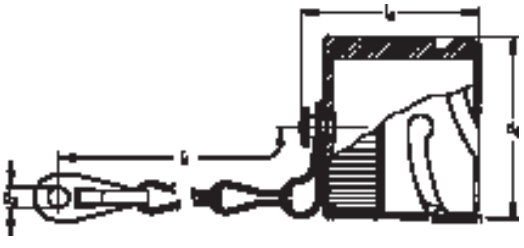

VG95234 Style KB with chain

Shell size	VG95234 Part no. with chain	VG95234 Part no. with cord	Cannon Part no. with chain	Cannon Part no. with cord	d_1 max.	d_2	l_1	l_2 max.	Weight g max.
10SL	VG95234KB10SL	VG95234KC10SL	CA121004-1	CAB80-10SL-D	21,0	4,3	90	29	19
12S	–	–	CA121004-2	CAB80-12S-D	24,0	4,3	100	29	23
14S	VG95234KB14S	VG95234KC14S	CA121004-3	CAB80-14S-D	27,5	4,3	100	29	26
16S	VG95234KB16S	VG95234KC16S	CA121004-4	CAB80-16S-D	30,0	4,3	100	29	28
16	VG95234KB16	VG95234KC16	CA121004-5	CAB80-16-D	30,0	4,3	115	37	33
18	VG95234KB18	VG95234KC18	CA121004-6	CAB80-18-D	33,5	4,3	115	37	36
20	VG95234KB20	VG95234KC20	CA121004-7	CAB80-20-D	37,0	4,7	130	37	43
22	VG95234KB22	VG95234KC22	CA121004-8	CAB80-22-D	40,0	4,7	130	37	47
24	VG95234KB24	VG95234KC24	CA121004-9	CAB80-24-D	43,5	4,7	130	37	53
28	VG95234KB28	VG95234KC28	CA121004-10	CAB80-28-D	49,5	4,7	190	37	63
32	VG95234KB32	VG95234KC32	CA121004-11	CAB80-32-D	56,0	5,5	190	37	75
36	VG95234KB36	VG95234KC36	CA121004-12	CAB80-36-D	62,5	5,5	190	37	88

Dimensions shown in mm
Specifications and dimensions subject to change

Dummy Receptacles

Front panel mounting (rear side open)

VG95234 Style BOD (Flange with through-holes)
CA3105-B

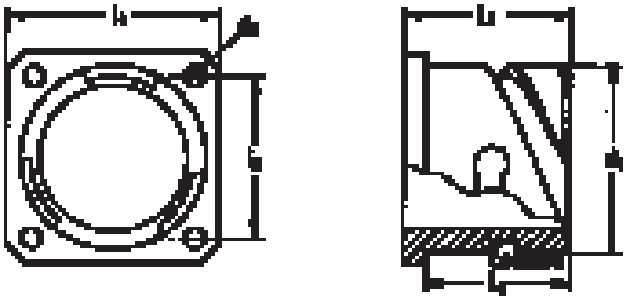

Shell size	VG 95234 Part no.	Cannon Part no.	d_1 –0,15	d_2 ±0,2	l_1 ±0,3	l_2 ±0,1	l_3 max.	l_4 +0,3
10SL	VG95234BOD10SL	CA3105E10SL-B	18,2	3,2	25,4	18,2	17,5	14,2
12S	–	CA3105E12S-B	21,4	3,2	28,0	20,6	18,0	14,2
14S	VG95234BOD14S	CA3105E14S-B	24,6	3,2	30,0	23,0	18,0	14,2
16S	VG95234BOD16S	CA3105E16S-B	27,4	3,2	32,5	24,6	18,0	14,2
16	VG95234BOD16	CA3105E16-B	27,4	3,2	32,5	24,6	23,5	19,0
18	VG95234BOD18	CA3105E18-B	30,8	3,2	35,0	27,0	23,5	19,0
20	VG95234BOD20	CA3105E20-B	34,2	3,2	38,0	29,4	23,5	19,0
22	VG95234BOD22	CA3105E22-B	37,4	3,2	41,0	31,8	23,5	19,0
24	VG95234BOD24	CA3105E24-B	40,9	3,7	44,5	34,9	25,5	20,6
28	VG95234BOD28	CA3105E28-B	46,7	3,7	50,8	39,7	25,5	20,6
32	VG95234BOD32	CA3105E32-B	53,4	4,3	57,0	44,5	27,0	22,2
36	VG95234BOD36	CA3105E36-B	59,6	4,3	63,5	49,2	27,0	22,2

Dummy Receptacles

Rear panel mounting (rear side closed)

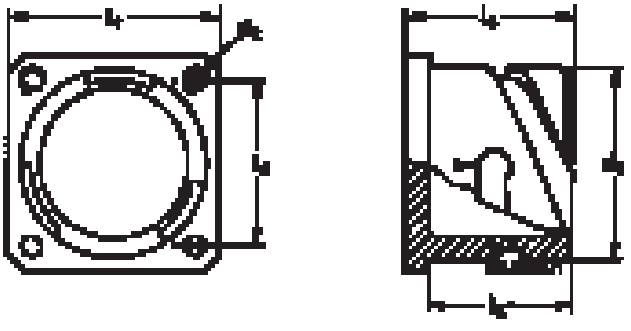

Shell size	CA3105E-B Cannon Part no. with thread Style A	CA3105E-B-05 Cannon Part no. with through holes Style B	d_1	l_1 ±0,25	l_2 ±0,3	l_3	l_4 +0,3	Style A d_2	Style B d_2 ±0,2
10SL	248-8513-000	248-8501-000	18,2	25,4	18,2	21,1	18,3	M4	3,2
12S	248-8514-000	248-8502-000	21,4	28,0	20,6	21,5	18,3	M4	3,2
14S	248-8515-000	248-8503-000	24,6	30,0	23,0	21,5	18,3	M4	3,2
16S	248-8516-000	248-8504-000	27,4	32,5	24,6	21,5	18,3	M4	3,2
16	248-8517-000	248-8505-000	27,4	32,5	24,6	24,8	21,6	M4	3,2
18	248-8518-000	248-8506-000	30,8	35,0	27,0	27,2	23,15	M4	3,2
20s	248-8519-000	248-8507-000	34,2	38,0	29,4	27,2	23,15	M4	3,2
22	248-8520-000	248-8508-000	37,4	41,0	31,8	27,2	23,15	M4	3,2
24	248-8521-000	248-8509-000	40,9	44,5	34,9	27,2	23,15	M4	3,7
28	248-8522-000	248-8510-000	46,7	50,8	39,7	28,2	24,15	M5	3,7
32	248-8523-000	248-8511-000	53,4	57,0	44,5	28,2	24,15	M5	4,4
36	248-8524-000	248-8512-000	59,6	63,5	49,2	28,2	24,15	M5	4,4

Sealing Rings

for use on the barrel of the plug

Size	Part no.	d_9
10SL	980-8550-000	9,0
12S	980-8551-000	11,5
14S	980-8552-000	14,0
16/16S	980-8553-000	17,0
18	980-8554-000	19,5
20	980-8555-000	22,5
22	980-8556-000	25,4
24	980-8557-000	28,5
28	980-8558-000	34,0
32	980-8559-000	40,0
36	980-8560-000	45,0

Wire Hole Fillers

Where contacts are not used, the contact cavities are to be closed by wire holes fillers.

Size	VG95234 Part no.	For contact size metr.	AWG	d_1 ±0,1	d_2 ±0,2	l_1 ±0,1	l_2 ±0,3	Colour	Part no.
20	VG95234B20	10		2,3	3,0	2,4	9,7	red	225-1000-000
16S	VG95234B16S	15S	16S	2,8	3,7	1,5	4,8	nature	225-8510-000
16	VG95234B16	15S/15	16S/16	2,8	3,7	3,2	11,9	blue	225-0017-000
12	VG95234B12	25/25A	12	3,7	4,6	3,2	11,9	yellow	225-0018-000
8	VG95234B08	60/100	8	5	5,8	3,2	11,9	white	225-0019-000
4	VG95234B04	160	4	7,6	8,5	3,2	11,9	green	225-8502-000
0	VG95234B00	500	0	12,8	13,5	3,2	11,9	black	225-8503-000

Dimensions shown in mm
Specifications and dimensions subject to change

Cable Clamps

without telescoping bushing

VG95234 Style **KK**

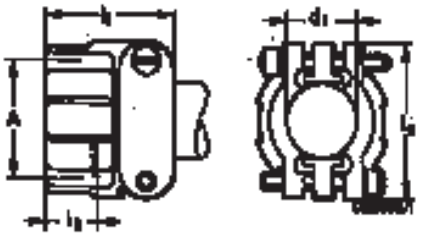

VG 95234 Part no.	Former Designation MS	Shell size suitable for connectors acc. MS	A-Thread	l_2 max.	d_1 max.	l_1 max.	l_3 max.	Shell-Weight g
VG95234KK 4	MS3057- 4A*	10SL, 12S,	5/7-24NEF-2B	10,5	7,9	20,8	22,5	13,2
VG95234KK 6	MS3057- 6A*	14S,	3/4-20UNEF-2B	10,5	11,1	22,4	27,4	18,6
VG95234KK 8	MS3057- 8A*	16S, 16	7/8-20UNEF-2B	10,5	14,2	24,0	29,8	23,6
VG95234KK12	MS3057-10A*	18	1-20UNEF-2B	10,5	15,8	24,0	32,2	27,3
VG95234KK12	MS3057-12A*	20, 22	1 3/16-18NEF-2B	10,5	19,0	24,0	37,4	37,2
VG95234KK16	MS3057-16A*	24, 28	1 7/16-18NEF-2B	10,5	23,7	26,4	43,5	56,3
VG95234KK20	MS3057-20A*	32	1 3/4-18NS-2B	12,0	31,8	28,0	51,7	83,9
VG95234KK24	MS3057-24A*	36	2-18NS-2B	13,7	34,6	29,6	57,8	109,8

* WB = Cable clamp with cable telescoping bushing

Telescoping Bushings

Telescoping bushing (used with MS3057A resp. VG95234KK cable clamp) keep dirt, oil and dust out of endbell. Taping or wrapping wires is eliminated since bushing protects wires guided through clamp. Combinations of two bushings may be used to decrease inner diameter for improved sealing.

Material: Polychloroprene

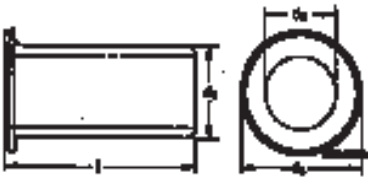

Shell size	VG95234 Part no.	MS Part no.	Cannon Part no.	d_1	d_2	d_3	l	Weight g
10SL, 12S	VG95234KT10SL	–	012-8552-000	8,0	6,6	9,9	70,0	4
14S	VG95234KT14S	–	012-8554-000	10,9	9,1	12,7	67,0	5
16S, 16	VG95234KT16	MS3420-08	012-0218-000	14,0	11,1	19,0	64,0	6
18	VG95234KT18	MS3420-10	012-0219-000	15,7	14,3	22,0	60,0	4
20, 22	VG95234KT20	MS3420-12	012-0220-000	18,8	15,9	26,9	57,0	7
24	VG95234KT24	–	012-8555-000	21,2	16,6	26,9	57,0	13
28	VG95234KT28	–	012-8556-000	23,6	21,5	33,3	54,0	13
32	VG95234KT32	–	012-8557-000	26,5	21,5	33,3	54,0	26
	–	–	012-8558-000	31,5	26,8	40,4	51,0	26
36	VG95234KT32	–	012-8558-000	31,5	26,8	40,4	51,0	30
	–	MS3420-24	012-0223-000	34,7	31,8	46,8	48,0	30

Gaskets

Thickness of gaskets
made of Alu-Flex “2“ = 0,5 mm
made of Polychloropren “1“ = 1,0 mm

VG95234 Style DA for front panel mounting
VG95234 Style DH for front panel mounting

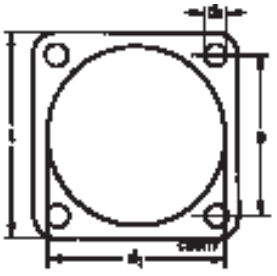

For front panel mounting

Size	VG 95234 Part no.	Part no. Version Polychloropen[1]	Part no. Version Alu-Flex[2]	l ±0,5	e ±0,2	d_1 +1 front panel	d_2 +0,5	Weight g max.
10SL	VG 95234 DA 10SL-X	075-8512-000	075-8512-001	25,4	18,2	15,7	4,2	2
12S		075-8513-000	075-8513-001	28,0	20,6	18,9	4,2	2
14S	VG 95234 DA 14S-X	075-8514-000	075-8514-001	30,0	23,0	22,1	4,2	2
16/16S	VG 95234 DA 16X	075-8515-000	075-8515-001	32,5	24,6	25,3	4,2	2
18	VG 95234 DA 18-X	075-8516-000	075-8516-001	35,0	27,0	28,4	4,2	2
20	VG 95234 DA 20-X	075-8517-000	075-8517-001	38,0	29,4	31,6	4,2	2
22	VG 95234 DA 22-X	075-8518-000	075-8518-001	41,0	31,8	34,8	4,2	2
24	VG 95234 DA 24-X	075-8519-000	075-8519-001	44,5	34,9	38,0	4,2	2
28	VG 95234 DA 28-X	075-8520-000	075-8520-001	50,8	39,7	44,3	5,1	2
32	VG 95234 DA 32-X	075-8521-000	075-8521-001	57,0	44,5	50,7	5,1	2
36	VG 95234 DA 36-X	075-8522-000	075-8522-001	63,5	49,2	57,0	5,1	2

For rear panel mounting

Size	VG 95234 Part no.	Part no. Version Polychloropen[1]	Part no. Version Alu-Flex[2]	l ±0,5	e ±0,2	d_1 +1 front panel	d_2 +0,5	Weight g max.
10SL	VG 95234 DH 10SL-X	075-8501-000	075-8501-001	25,4	18,2	18,2	4,2	2
12S		075-8502-000	075-8502-001	28,0	20,6	21,4	4,2	2
14S	VG 95234 DH 14S-X	075-8503-000	075-8503-001	30,0	23,0	24,6	4,2	2
16/16S	VG 95234 DH 16X	075-8504-000	075-8504-001	32,5	24,6	27,4	4,2	2
18	VG 95234 DH 18-X	075-8505-000	075-8505-001	35,0	27,0	30,8	4,2	2
20	VG 95234 DH 20-X	075-8506-000	075-8506-001	38,0	29,4	34,2	4,2	2
22	VG 95234 DH 22-X	075-8507-000	075-8507-001	41,0	31,8	37,4	4,2	2
24	VG 95234 DH 24-X	075-8508-000	075-8508-001	44,5	34,9	40,9	4,2	2
28	VG 95234 DH 28-X	075-8509-000	075-8509-001	50,8	39,7	46,7	5,1	2
32	VG 95234 DH 32-X	075-8510-000	075-8510-001	57,0	44,5	53,4	5,1	2
36	VG 95234 DH 36-X	075-8511-000	075-8511-001	63,5	49,2	59,6	5,1	2

X = insert “1“ (electrically not conductive) or “2“ (electrically conductive)

Contacts

Standard contacts and contacts with reduced termination diameter

Pin contacts

Size 15S/16S, 15/16, 25/12, 60/100/8, 160/4, 500/0

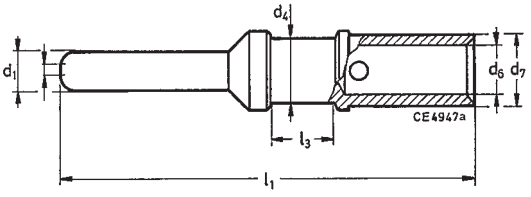

Size 10/20

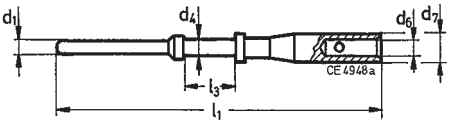

Finish

A36 – 5 µm silver plated and passivated
A176 – 2 µm nickel plated, min. 0,5 µm gold plated

Contact size	VG95234 Part no.	Wire size mm²	AWG	Part no. with finish Standard: A36 silver plated	Part no. with finish Mod.Code: A176 gold plated	d_1 -0,05	d_4	d_6	d_7	l_1 ±0,15	l_3 ±0,5	Color Code
10/20	VG95234P10-002	0,5-1,0	20/18	030-8585-000	030-8585-006	1,04	1,5 -0,05	1,5 +0,05	2,4 -0,05	28,4	4,75	–
	VG95234P10-001	0,2-0,4	26/22	030-8585-010	–	1,04	1,5 -0,05	0,9 +0,05	2,4 -0,05	28,4	4,75	blue
15S/16S	VG95234P15S-003	0,75-1,5	18/16	030-8586-000	030-8586-006	1,6	1,75 -0,1	1,75 +0,08	2,75 -0,05	27,4	3,85	–
	VG95234P15S-002	0,3-0,6	22/20	330-8744-000	330-8744-006	1,6	1,75 -0,1	1,2 +0,1	2,75 -0,05	27,4	3,85	red
	VG95234P15S-001	0,14-0,38	22/26	030-8586-010	–	1,6	1,75 -0,1	0,9 +0,05	2,75 -0,05	27,4	3,85	blue
15/16	VG95234P15-003	0,75-1,5	18/16	030-8587-000	030-8587-006	1,6	1,75 -0,1	1,75 +0,08	2,75 -0,05	31,4	7,9	–
	VG95234P15-002	0,3-0,6	22/20	330-8659-000	330-8659-006	1,6	1,75 -0,1	1,2 +0,1	2,75 -0,05	31,4	7,9	red
	VG95234P15-001	0,14-0,38	22/26	030-8587-030	030-8587-036	1,6	1,75 -0,1	0,9 +0,05	2,75 -0,05	31,4	7,9	blue
25/12	VG95234P25-002	2,0-3,0	14/12	030-8588-000	030-8588-006	2,4	3,3 -0,15	2,5 +0,1	3,8 -0,1	37,0	7,9	–
	VG95234P25-001	0,75-1,5	18/16	030-8588-010	030-8588-016	2,4	3,3 -0,15	1,75 +0,08	3,4 -0,1	37,0	7,9	black
		4,0	–	030-8588-054	–	2,4	3,3 -0,15	2,8 +0,1	3,8 -0,1	37,0	7,9	
60/100/8	VG95234P8-001	–	8	030-8612-000	030-8612-006	3,6	6,25 -0,15	4,55 +0,1	6,8 -0,1	39,6	6,35	–
	VG95234P60-002	6,0	10	030-8589-000	–	3,6	6,25 -0,15	3,5 +0,1	6,8 -0,1	39,6	6,35	yellow
	VG95234P100-001	10,0	–	030-8590-000	–	3,6	6,25 -0,15	4,8 +0,1	6,8 -0,1	39,6	6,35	–
	VG95234P60-001	2,0-3,0	14/12	030-8612-010	–	3,6	6,25 -0,15	2,5 +0,05	6,8 -0,1	39,6	6,35	green
160/4	VG95234P4-001	–	4	030-8613-000	–	5,75	9,55 -0,15	7,1 +0,15	9,55 -0,1	39,6	6,35	–
	VG95234P160-002	16,0	–	030-8591-000	–	5,75	9,55 -0,15	6,2 +0,15	9,55 -0,1	39,6	6,35	–
		10,0	–	030-8591-020	–	5,75	9,55 -0,15	4,8 +0,1	9,55 -0,1	39,6	6,35	–
	VG95234P160-001	–	6	030-8613-010	–	5,75	9,55 -0,15	5,7 +0,1	9,55 -0,1	39,6	6,35	brown
500/0	VG95234P0-001	–	0	030-8614-000	–	9,1	13,55 -0,15	11,5 +0,15	14,35 -0,1	41,0	6,35	–
	VG95234P500-003	50,0	–	030-8592-000	–	9,1	13,55 -0,15	10,7 +0,15	14,35 -0,1	41,0	6,35	–
	VG95234P500-001	25,0	4	030-8614-010	–	9,1	13,55 -0,15	7,6 +0,15	14,35 -0,1	41,0	6,35	white
	VG95234P500-002	35,0	2	030-8614-020	–	9,1	13,55 -0,15	9,1 +0,15	14,35 -0,1	41,0	6,35	grey
		16,0	–	030-8614-030	–	9,1	13,55 -0,15	6,2 +0,15	14,35 -0,1	41,0	6,35	–

Contacts

Standard contacts and contacts with reduced termination diameter

Socket contacts

Size 10/20

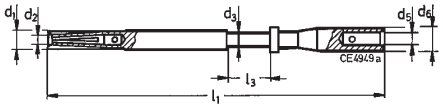

Size 25/12

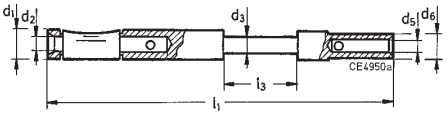

Finish

A36 – 5 µm silver plated and passivated

A176 – 2 µm nickel plated, min. 0,5 µm gold plated

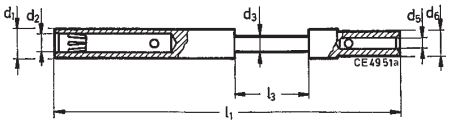

Size 15S/16S, 15/16

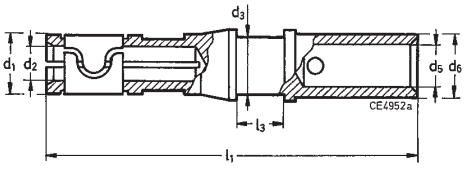

Size 60/100/8, 160/4, 500/0

Contact size	VG95234 Part no.	Wire size mm²	AWG	Part no. with finish Standard: A36 silver plated	Part no. with finish Mod.Code A176 gold plated	d_1	d_2 +0,05	d_3	d_5	d_6	l_1 ±0,2	l_3 ±0,1	Color Code
10/20	VG95234S10-002	0,5-1,0	20/18	031-8554-000	031-8554-006	2,0 -0,1	1,07	1,5 -0,05	1,5 +0,05	2,4 -0,05	36,8±0,3	4,75	–
	VG95234S10-001	0,2-0,4	26/22	031-8554-010	–	2,0 -0,1	1,07	1,5 -0,05	0,9 +0,05	2,4 -0,05	36,8±0,3	4,75	blue
15S/16S	VG95234S15S-003	0,75-1,5	18/16	031-8555-110	031-8555-115	3,2 -0,15	1,65	1,75 -0,1	1,75 +0,08	2,75 -0,05	29,1	3,9	–
	VG95234S15S-002	0,3-0,6	22/20	031-8688-110	031-8688-115	3,2 -0,15	1,65	1,75 -0,1	1,20 +0,1	2,75 -0,05	29,1	3,9	red
	VG95234S15S-001	0,14-0,38	22/26	031-8555-130	–	3,2 -0,15	1,65	1,75 -0,1	0,90 +0,05	2,75 -0,05	29,1	3,9	blue
15/16	VG95234S15-003	0,75-1,5	18/16	031-8556-110	031-8556-115	3,2 -0,15	1,65	1,75 -0,1	1,75 +0,08	2,75 -0,05	37,8	7,9	–
	VG95234S15-002	0,3-0,6	22/20	031-8639-120	031-8639-115	3,2 -0,15	1,65	1,75 -0,1	1,2 +0,1	2,75 -0,05	37,8	7,9	red
	VG95234S15-001	0,14-0,38	22/26	031-8556-130	–	3,2 -0,15	1,65	1,75 -0,1	0,9 +0,05	2,75 -0,05	37,8	7,9	blue
25/12	VG95234S25-002	2,0-3,0	14/12	031-8557-000	031-8557-006	4,8 -0,1	2,45	3,3 -0,1	2,5 +0,1	3,8 -0,1	37,0	7,9	–
	VG95234S25-001	0,75-1,5	18/16	031-8557-020	031-8557-026	4,8 -0,1	2,45	3,3 -0,1	1,75 +0,08	3,4 -0,1	37,0	7,9	black
		4,0	–	031-8557-010	–	4,8 -0,1	2,45	3,3 -0,1	2,8 +0,1	3,8 -0,1	37,0	7,9	–
		0,3–0,6	22/20	031-8557-040	–	4,8 -0,1	2,45	3,3 -0,1	1,2 +0,1	2,75 -0,1	37,0	7,9	–
60/100/8	VG95234S8-001	–	8	031-8519-000	031-8519-006	6,5 -0,2	3,65	6,25 -0,2	4,55 +0,1	6,8 -0,1	40,1	6,35	–
	VG95234S60-002	6,0	10	031-8558-000	–	6,5 -0,2	3,65	6,25 -0,2	3,5 +0,1	6,8 -0,1	40,1	6,35	yellow
	VG95234S100-001	10,0	–	031-8559-000	–	6,5 -0,2	3,65	6,25 -0,2	4,8 +0,1	6,8 -0,1	40,1	6,35	–
	VG95234S60-001	2,0-3,0	14/12	031-8519-010	–	6,5 -0,2	3,65	6,25 -0,2	2,5 +0,05	6,8 -0,1	40,1	6,35	green
160/4	VG95234S4-001	–	4	031-8520-000	–	8,6 -0,2	5,8	9,55 -0,2	7,1 +0,15	9,55 -0,1	40,1	6,35	–
	VG95234S160-002	16,0	–	031-8560-000	–	8,6 -0,2	5,8	9,55 -0,2	6,2 +0,15	9,55 -0,1	40,1	6,35	–
		10,0	–	031-8560-020	–	8,6 -0,2	5,8	9,55 -0,2	4,8 +0,1	9,55 -0,1	40,1	6,35	–
	VG95234S160-001	–	6	031-8520-010	–	8,6 -0,2	5,8	9,55 -0,2	5,7 +0,15	9,55 -0,1	40,1	6,35	brown
500/0	VG95234S0-001	–	0	031-8521-000	–	13,2 -0,2	9,15	13,55 -0,2	11,5 +0,15	14,35 -0,1	41,6	6,35	–
	VG95234S500-003	50,0	–	031-8561-000	–	13,2 -0,2	9,15	13,55 -0,2	10,7 +0,15	14,35 -0,1	41,6	6,35	–
	VG95234S500-001	25,0	4	031-8521-010	–	13,2 -0,2	9,15	13,55 -0,2	7,6 +0,15	14,35 -0,1	41,6	6,35	white
	VG95234S500-002	35,0	2	031-8521-020	–	13,2 -0,2	9,15	13,55 -0,2	9,1 +0,15	14,35 -0,1	41,6	6,35	grey
		16,0	–	031-8521-030	–	13,2 -0,2	9,15	13,55 -0,2	6,2 +0,15	14,35 -0,1	41,6	6,35	–

Dimensions shown in mm

Specifications and dimensions subject to change

Termination Tools

for pin contacts according VG95234 and for Cannon contacts with reduced termination size.

Contact size	Wire size mm²	AWG	Hand crimp tool Type	Crimp die for M22520-1-01	Pneumatic crimp tool[1) Standard type	Turret for Standard type	Universal-type	Turret for Universal type
10/20	0,2 – 1,0	20 – 24	M22520-1-01 Hand crimp tool (eight indent crimp)	600 325 600 325	Eight indent crimp 612 871 table device with foot pedal 611 380	600 098 600 098	Eight indent crimp 612 141 Table device with foot pedal 611 380	608 325 608 325
15S/16S	0,14 – 1,5	16 – 26		TH 452 TH 452		600 082 600 082		TH 452 TH 452
15/16	0,14 – 1,5	16 – 26		TH 452 TH 452		604 292 604 292		TH 452 TH 452
25/12	0,75 – 4,0	12 – 18		TH 452 TH 452 TH 452		600 099 600 099 600 099		TH 452 TH 452 TH 452

Contact size	Wire size mm²	AWG	Hydraulic basic equipment	Crimp tool (2 of each required) 6-kt Crimp die	
60/8 100/	10,0 – 2,0	8 – 14	Electro-hydraulic tool * HK12EL (order number: 121586-5075) Hand operated hydraulic tool HK120 (order number: 121586-5077)	CT 317-8678-000	
160/4	16,0 – 10,0	4 – 6		CT 317-8678-001	
500/0	50,0 – 16,0	0 – 4		CT 317-8678-002	

Notes

1. For large series production, semi-automatic crimp machine Type HACS-IV-MSXX upon request

2. For insertion and extraction of the contacts and for connector assembly, see Assembly Instructions MIL-C-5015/VG95234

3. Standard contacts acc. to MIL-C-5015/VG95234

* Datasheet available upon request

To insert the socket contact of size 15S/16S, 15/16/25 and 12, the following guiding pins are to be used:

Part Nr.	Contact size AWG	metric
226-1017-000	16S/16	15S/15
226-1018-000	12	25

Termination Tools

for pin contacts according VG95234 and Cannon contacts with reduced termination diameter.

Contact size	Wire size mm²	AWG	Hand crimp tool Type	Crimp die for M22520-1-01	Pneumatic crimp tool[1] Standard type	Turret for Standard type	Universal type	Turret for Universal type
10/20	0,2-1,0	18 – 24	M22520-1-01 Eight indent tool (eight indent Crimp)	600 325 600 325	Eight indent crimp 612 871 Table device and foot pedal 611 380	600 098 600 098	Eight indent crimp 612 141 table device with foot pedal 611 380	600 325 600 325
15S/16S	0,2-1,0	16 – 22		TH 452 611 380		600 083 611 380		TH 452
15/16	0,2-1,0	16 – 22		TH 452		604 081		TH 452
25/12	0,2-1,0	12 – 18		TH 452		600 099		TH 452

Contact size	Wire size mm²	AWG	Hydraulic basic equipment	Crimp tool (2 of each required) 6-kt Crimp die	
60/8 100/	10 – 2	8 – 14	Electro-hydraulic tool * HK12EL (order number: 121586-5075) Hand operated hydraulic tool HK120 (order number: 121586-5077)	CT 317-8678-000	
160/4	16 – 10	4 – 6		CT 317-8678-001	
500/0	50 – 14	0 – 4		CT 317-8678-002	

Notes

1. For large series production, semi-automatic crimp machine Type HACS-IV-MSXX upon request

2. For insertion and extraction of the contacts and for connector assembly, see Assembly Instructions MIL-C-5015/VG95234

3. Standard contacts acc. MIL-C-5015/VG95234

* Datasheet available upon request

Product Safety Information

THIS NOTE MUST BE READ IN CONJUNCTION WITH THE PRODUCT DATA SHEET/CATALOG. FAILURE TO OBSERVE THE ADVICE IN THIS INFORMATION SHEET AND THE OPERATING CONDITIONS SPECIFIED IN THE PRODUCT DATA SHEET/ CATALOG COULD RESULT IN HAZARDOUS SITUATIONS.

1. MATERIAL CONTENT AND PHYSICAL FORM

Electrical connectors do not usually contain hazardous materials. They contain conducting and non-conducting materials and can be divided into two groups.

a) Printed circuit types and low cost audio types which employ all plastic insulators and casings.

b) Rugged, Fire Barrier and High Reliability types with metal casings and either natural rubber, synthetic rubber, plastic or glass insulating materials. Contact materials vary with type of connector and also application and are usually manufactured from either: Copper, copper alloys, nickel, alumel, chromel or steel. In special applications, other alloys may be specified.

2. FIRE CHARACTERISTICS AND ELECTRIC SHOCK HAZARD

There is no fire hazard when the connector is correctly wired and used within the specified parameters. Incorrect wiring or assembly of the connector or careless use of metal tools or conductive fluids, or transit damage to any of the component parts may cause electric shock or burns. Live circuits must not be broken by separating mated connectors as this may cause arcing, ionization and burning. Heat dissipation is greater at maximum resistance in a circuit. Hot spots may occur when resistance is raised locally by damage, e.g. cracked or deformed contacts, broken strands of wire. Local overheating may also result from the use of the incorrect application tools or from poor quality soldering or slack screw terminals. Overheating may occur if the ratings in the product Data Sheet/Catalog are exceeded and can cause breakdown of insulation and hence electric shock. If heating is allowed to continue it intensifies by further increasing the local resistance through loss of temper of spring contacts, formation of oxide film on contacts and wires and leakage currents through carbonization of insulation and tracking paths. Fire can then result in the presence of combustible materials and this may release noxious fumes. Overheating may not be visually apparent. Burns may result from touching overheated components.

3. HANDLING

Care must be taken to avoid damage to any component parts of electrical connectors during installation and use. Although there are normally no sharp edges, care must be taken when handling certain components to avoid injury to fingers. Electrical connectors may be damaged in transit to the customers, and damage may result in creation of hazards. Products should therefore be examined prior to installation/use and rejected if found to be damaged.

4. DISPOSAL

Incineration of certain materials may release noxious or even toxic fumes.

5. APPLICATION

Connectors with exposed contacts should not be selected for use on the current supply side of an electrical circuit, because an electric shock could result from touching exposed contacts on an unmated connector. Voltages in excess of 30 V ac or 42.5 V dc are potentially hazardous and care should be taken to ensure that such voltages cannot be transmitted in any way to exposed metal parts of the connector body. The connector and wiring should be checked, before making live, to have no damage to metal parts or insulators, no solder blobs, loose strands, conducting lubricants, swarf, or any other undesired conducting particles. Circuit resistance and continuity check should be made to make certain that there are no high resistance joints or spurious conducting paths. Always use the correct application tools as specified in the Data Sheet/Catalog. Do not permit untrained personnel to wire, assemble or tamper with connectors. For operation voltage please see appropriate national regulations.

IMPORTANT GENERAL INFORMATION

(i) Air and creepage paths/Operating voltage. The admissible operating voltages depend on the individual applications and the valid national and other applicable safety regulations.

For this reason the air and creepage path data are only reference values. Observe reduction of air and creepage paths due to PC board and/or harnessing.

(ii) Temperature

All information given are temperature limits. The operation temperature depends on the individual application.

(iii) Other important information

Cannon continuously endeavors to improve their products. Therefore, Cannon products may deviate from the description, technical data and shape as shown in this catalog and data sheets.

“Engineered for life” is a registered trademark of ITT Industries, ©2005. All other trademarks or registered trademarks are property of their respective owners. All data subject to change without notice.

Product Warranty

ITT Cannon, a Division of ITT Industries, Inc. manufactures the highest quality products available in the marketplace; however these products are intended to be used in accordance with the specifications in this publication. Any use or application that deviates from the stated operating specifications is not recommended and may be unsafe. No information and data contained in this publication shall be construed to create any liability on the part of Cannon. Any new issue of this publication shall automatically invalidate and supersede any and all previous issues. A limited warranty applies to Cannon products. Except for obligations assumed by Cannon under this warranty, Cannon shall not be liable for any loss, damage, cost of repairs, incidental or consequential damages of any kind, whether or not based on express or implied warranty, contract, negligence or strict liability arising in connection with the design, manufacture, sale, use or repair of the products. Product availability, prices and delivery dates are exclusively subject to our respective order confirmation form; the same applies to orders based on development samples delivered. This publication is not to be construed as an offer. It is intended merely as an invitation to make an offer. By this publication, Cannon does not assume responsibility or any liability for any patent infringements or other rights of third parties which may result from its use. Reprinting this publication is generally permitted, indicating the source. However, Cannon's prior consent must be obtained in all cases.

ITT ...

providing a comprehensive offering of connectivity solutions.

In addition to connector products, we provide a complete line of electronic components and value-added solutions.

CONNECTOR PRODUCTS

- Circular
- Compact flash
- D-Subminiature
- Fiber optics
- Filter
- Microminiature
- Mobile
- Rack & Panel
- RF
- USB
- Zero insertion force
- Smart Cards

SWITCH PRODUCTS

- Top/side actuated tacts
- Low profile SMT
- Navigation / scrolling switches
- Toggle, rocker, pushbutton, DIP, slide, snap, switchlock, rotary, thumbwheel

KEYPADS / PRECISION POLYMERS

- Rubber and In Mold Decoration (IMD) products
- Wide range of cosmetic options
- Integration of decorated and metalized plastic keytops
- Multiple PILL and contact options
- Precision molded polymeric solutions

DOME ARRAYS / EL LAMPS

- Modular assembly options include: ESD shielding, keypads, EL backlighting, rigid or flexible circuits
- Complete design, engineering and test capabilities
- Low, mid and high volume production capabilities

INTERFACE CONTROLS

- From multi-function grips to sophisticated control systems, hall effect products and front panel assemblies
- Electronics and software engineering development
- Worldwide design and manufacturing
- High-mix production capabilities
- Global sourcing and supply chain management

ITT

Connector Product Locations

With manufacturing facilities, sales representatives and distributors located worldwide, please visit our website at www.ittcannon.com for a complete listing and to find the office nearest you.

GERMANY
Cannonstrasse 1
Weinstadt, 71384
phone: 49.7151.699.0
fax: 49.7151.699.217

HONG KONG
Unit 901 & 912, West Tower
Shun Tak Center
168-200 Connaught Road
Central
phone: 852.2732.2720
fax: 852.2732.2919

ITALY
Via Pietro Panzeri 10
Milano, 20123
phone: 39.2.58180.1
fax: 39.2.8372036

UK
Jays Close, Viables Estate
Basingstoke, RG22 4BA
phone: 44.1256.311200
fax: 44.1256.323356

USA
666 East Dyer Road
Santa Ana, CA 92705
toll free: 1.800.854.3028
phone: 1.714.557.4700
fax: 1.714.628.2142

"Engineered for life" is a registered trademark of ITT Industries.©2005. All other trademarks or registered trademarks are property of their respective owners. All data subject to change without notice.

CAB 05-Sept

www.ittcannon.com