番号 NO.	名称 NAME	原料 MATERIAL	数量 QT'Y	仕上げ FINISH
①	ハウジング HOUSING	ナイロン NYLON	1	UL94V-0
②	ターミナル TERMINAL	りん青銅 (t=0.2) PHOSPHOR BRONZE(t=0.2)	N	全体錫メッキ PRE-TINNED

注) NOTES

1. 原料および仕上げ ：表参照
   MATERIAL AND FINISH : SEE CHART.

2 製品番号
MATERIAL NO.
54596-**1*

極数 CIRCUIT SIZE(02~20)

色 COLOR 10 ：自然色 NATURAL
12 ：赤 RED
13 ：黄 YELLOW

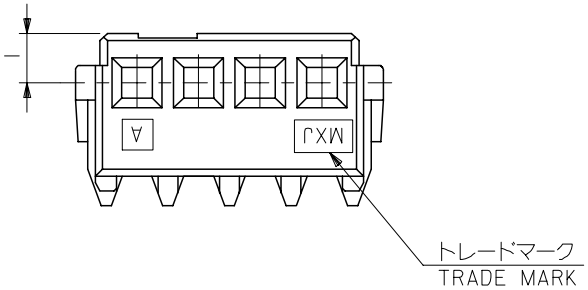

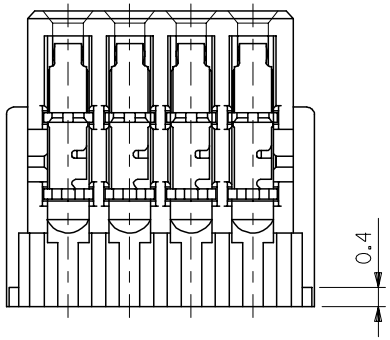

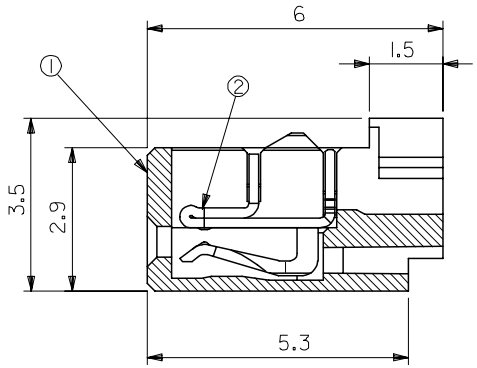

SECTION X-X

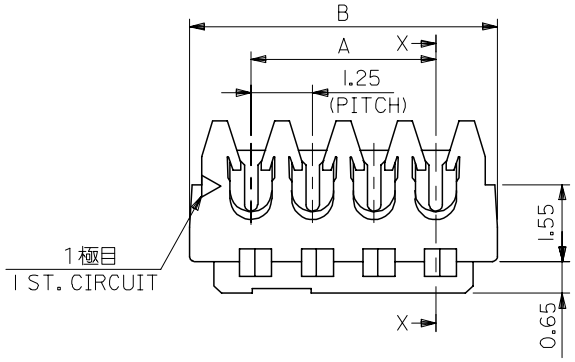

B	A	極数 CIRCUIT SIZE	2 製品番号 MATERIAL NO.	MODEL NO.
26.25	23.75	20	54596-201*	54596-**1*
25	22.5	19	54596-191*	
23.75	21.25	18	54596-181*	
22.5	20	17	54596-171*	
21.25	18.75	16	54596-161*	
20	17.5	15	54596-151*	
18.75	16.25	14	54596-141*	
17.5	15	13	54596-131*	
16.25	13.75	12	54596-121*	
15	12.5	11	54596-111*	
13.75	11.25	10	54596-101*	
12.5	10	9	54596-091*	
11.25	8.75	8	54596-081*	
10	7.5	7	54596-071*	
8.75	6.25	6	54596-061*	
7.5	5	5	54596-051*	
6.25	3.75	4	54596-041*	
5	2.5	3	54596-031*	
3.75	1.25	2	54596-021*	

WIRE RANGE
適用電線範囲
AWG #26,#28

WIRE RANGE
被覆外径
φ0.8 ~φ0.9

REVISED
EC NO: J2005-2687
DRWN:JHOSOKAWA 2005/03/25
CHKD:KTOYODA 2005/03/25
APPR:NUKITA 2005/04/05
DESCRIPTION
REV

GENERAL TOLERANCES (UNLESS SPECIFIED)

10 UNDER	±0.2
10 OVER 30 UNDER	±0.25
30 OVER	±0.3
ANGULAR ±3	°

DRAFT WHERE APPLICABLE MUST REMAIN WITHIN DIMENSIONS

DIMENSION STYLE: MM ONLY
SCALE: 10:1
DESIGN UNITS: METRIC
THIRD ANGLE PROJECTION

DRAWN BY: HTAKASE DATE: '99/04/29
CHECKED BY: YITO DATE:
APPROVED BY: HIKESUGI DATE:
MATERIAL NO.: SEE CHART

TITLE: SMALL MI2 REC. ASS'Y(SN)

molex MOLEX INCORPORATED

DOCUMENT NO.: SD-54596-004
SHEET NO.: 1 OF 1

SIZE A3

THIS DRAWING CONTAINS INFORMATION THAT IS PROPRIETARY TO MOLEX INCORPORATED AND SHOULD NOT BE USED WITHOUT WRITTEN PERMISSION