THIS DRAWING IS UNPUBLISHED. RELEASED FOR PUBLICATION -,- .
© COPYRIGHT - BY TYCO ELECTRONICS CORPORATION. ALL RIGHTS RESERVED.

LOC	DIST
AJ	16

REVISIONS

P	LTR	DESCRIPTION	DATE	DWN	APVD
	0	REV PER EC-0S14-0496-04	01FEB2005	AF	JL
	01	REVISED PER ECO-10-000444	31OCT09	KK	AEG

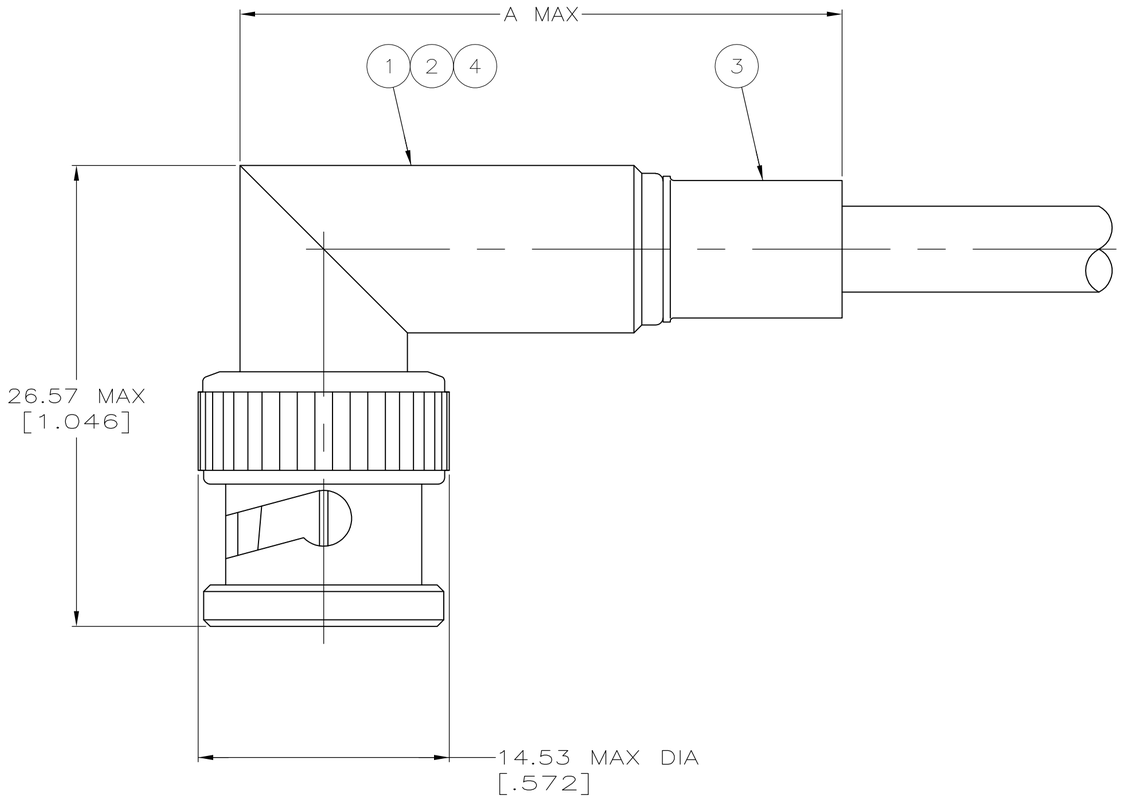

1. RG-58/U, RG-58A/U, RG-58B/U, & RG-58C/U
2. RG-55/U, RG-55A/U, RG-55B/U, & RG-223/U
3. RG-59/U, RG-59A/U, RG-59B/U, RG-62/U, RG-62A/U, & RG-62B/U
4. RG-188/U, 316 TYPE, DOUBLE BRAIDED CABLE
5. SEE I.S. 1914-5
6. OBSOLETE PARTS: OBSOLETE CIS STREAMLINING PER D.RENAUD/D.SINISI

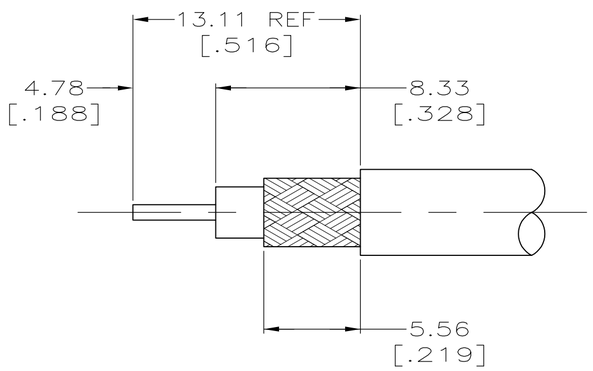

RECOMMENDED STRIP LENGTH

	CABLE SIZE	HAND TOOL	A	4 TUBING QTY=1	3 FERRULE QTY=1	2 CONTACT QTY=1	1 PLUG ASSY QTY=1	PART NUMBER
	4	220009-1	37.29 [1.468]	227194-1	9-329049-0	1-331368-2	225975-6	1-5225974-1
	3	69477-1	37.29 [1.468]	–	9-50428-0	2-331368-3	225975-4	5225974-5
6 OBSOLETE	2	69478-1	39.12 [1.540]	–	9-225382-0	1-331369-6	225975-3	~~5225974-2~~
	1	69478-1	39.12 [1.540]	–	9-225381-0	1-331369-6	225975-3	5225974-1

THIS DRAWING IS A CONTROLLED DOCUMENT.

DIMENSIONS: MM [INCHES]

TOLERANCES UNLESS OTHERWISE SPECIFIED:
0 PLC ± –
1 PLC ± –
2 PLC ± 0.41 [.016]
3 PLC ± –
4 PLC ± –
ANGLES ± –

MATERIAL –
FINISH –

DWN A. FERNANDEZ-DOCK5 01FEB2005
CHK J. HAVENER 01FEB2005
APVD J. LIPPERT 01FEB2005
PRODUCT SPEC 108-12020
APPLICATION SPEC –
WEIGHT –

Tyco Electronics
Tyco Electronics Corporation
Harrisburg, PA 17105-3608

NAME PLUG, RIGHT ANGLE, DUAL CRIMP, BNC

SIZE	CAGE CODE	DRAWING NO	RESTRICTED TO
A2	00779	C-5225974	–

CUSTOMER DRAWING | SCALE 4:1 | SHEET 1 OF 1 | REV 01

5225974