DWG. NO. SD-52365-003

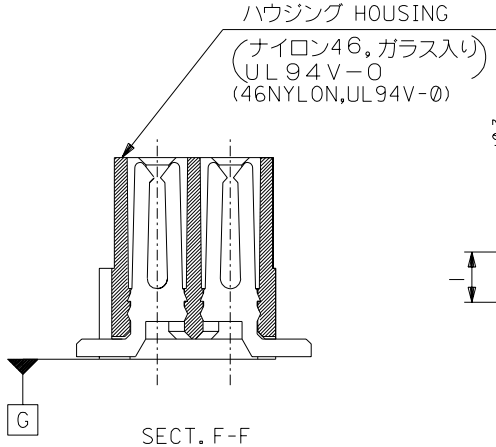

SECT. F-F

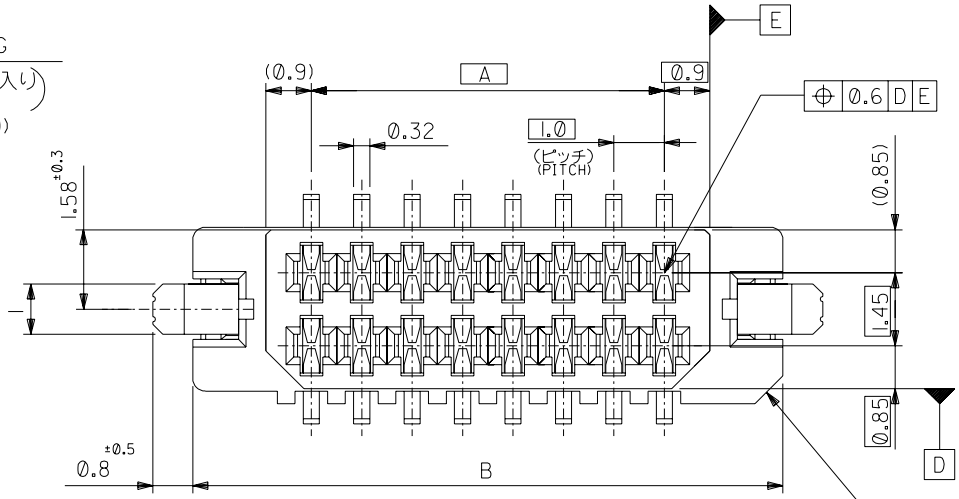

回路番号1（表示用切欠き）
CHAMFERING TO INDICATE CKT NO.1.

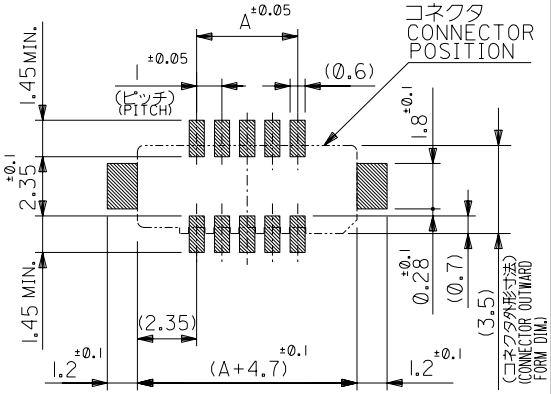

パターン参考寸法（マウント面）
RECOMMENDED DIM. FOR P.C.BOARD MOUNTING PATTERN (REF.)

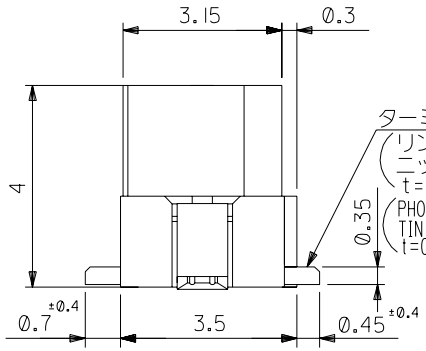

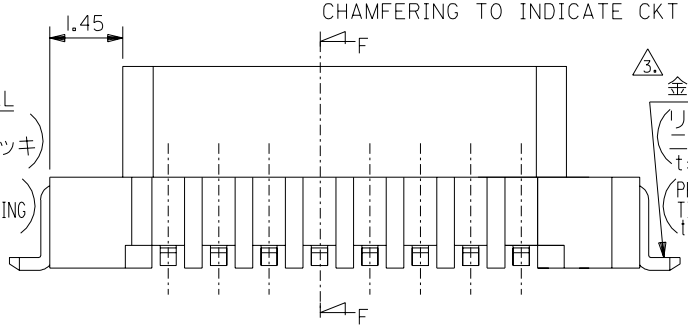

3. 金具 FITTING NAIL
(リン青銅、
ニッケル下地　錫メッキ
t=0.25
(PHOSPHOR BRONZE
TIN OVER NICKEL PLATING
t=0.25

18.7	14	52365-3029	30
17.7	13	-2829	28
16.7	12	-2629	26
15.7	11	-2429	24
14.7	10	-2229	22
13.7	9	-2029	20
12.7	8	-1829	18
11.7	7	-1629	16
10.7	6	-1429	14
9.7	5	-1229	12
8.7	4	-1029	10
7.7	3	-0829	8
6.7	2	52365-0629	6
B	A	MATERIAL NO.	極数 CIRCUIT

注記 NOTES.

1. 嵌合相手：53268 シリーズ
   MATES WITH : 53268 SERIES
2. ハウジングの底面 G からの金具及びターミナル半田付面のズレ量は
   上方向0．1MAX．下方向0．15MAX．とする。
   MISALIGNMENT OF SOLDER TAIL TIP AND FITTING NAIL FROM G
   : UPPER DIRECTION 0.1mmMAX.
   : LOWER DIRECTION 0.15mmMAX.

3. パターンハクリ止メ用金具
   FITTING NAIL FOR PREVENTION OF PEELING OF P.C.B. PATTERN.
4. 本製品は52365-**20の鉛フリー品である。
   THIS PRODUCT IS LEAD FREE OF 52365-**20.

DO NOT SCALE DRAWING

EC NO. / DRWN: / CH'K: / APPR:	EC NO. / DRWN: / CH'K: / APPR:	EC NO. / DRWN: / CH'K: / APPR:	EC NO. / DRWN: / CH'K: / APPR:	RELEASED EC NO. J2004-4092 DRWN: Y.WADA '04/05/07 CH'K: M.SASAO '04/05/07 APPR: M.SASAO '04/05/07	DESCRIPTION
				0	REV

MATERIAL 材料: 図中参照 SEE DRAWING
FINISH 仕上げ: —#—
WIRE RANGE 適用電線範囲: —#—
INS. RANGE 被覆外径: —#—

GENERAL TOLERANCES: (UNLESS SPECIFIED) 一般公差	
10 UNDER 未満	±0.2
10 OVER 以上 30 UNDER 未満	±0.25
30 OVER 以上	±0.3
ANGLE 角度	±3°

SCALE —#—
DRAWN BY & DATE: Y.WADA '04/05/07
CHECKED BY & DATE: M.SASAO '04/05/07
APPROVED BY & DATE: M.SASAO '04/05/07
CAD FILENAME: SD-52365-003.S01

MODEL NO. 52365-**29
DESIGN UNITS: ☒mm ☐INCH
THIRD ANGLE PROJECTION
DIMENSIONS: ☐ mm/INCH ☐ INCH/mm ☒ mm ONLY
SHT | REV
REVISE ON CAD ONLY

TITLE: 1.0 BOARD TO BOARD CONN. REC. HSG. ASS'Y SMT. -LEAD FREE-

molex MOLEX INCORPORATED

MATERIAL NO.: SEE CHART
DRAWING NO.: SD-52365-003
SHEET NO.: 1 OF 1
SIZE: B

THIS DRAWING CONTAINS INFORMATION THAT IS PROPRIETARY TO MOLEX INCORPORATED AND SHOULD NOT BE USED WITHOUT WRITTEN PERMISSION.

DWG. NO. SD-52365-004

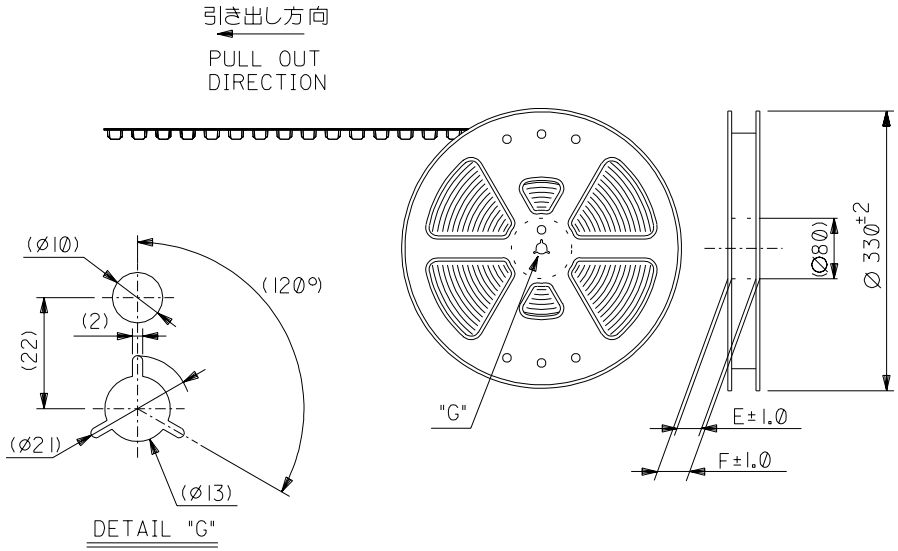

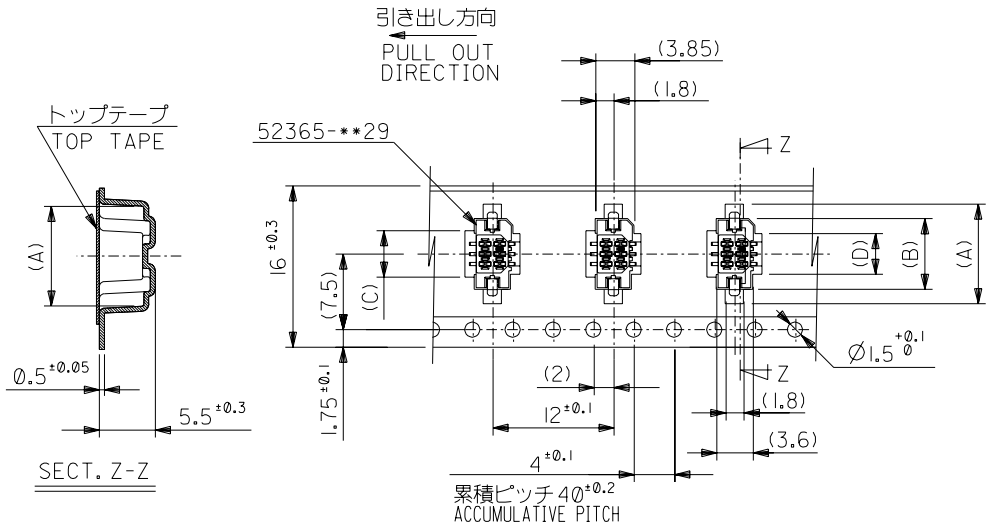

注記 NOTES

1. 梱包数量： 1000 個／リール NUMBER OF CONNECTORS: 1000PCS/REEL
2. リードテープ長さ LEAD TAPE LENGTH

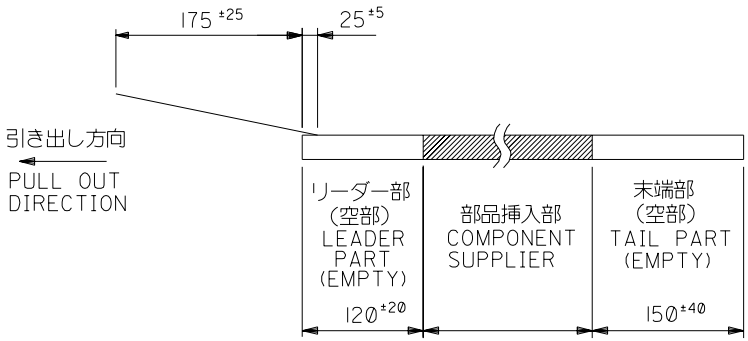

3. トップテープの剥離強度： 0.1N ～ 1.3N {10gf ～ 130gf}（剥離方向は下図参照）
   尚、本規格値は、出荷時に適用。（但し、輸送時に剥離が発生しない事。）
   PEELING OFF FORCE OF TOP TAPE : 0.1N ～ 1.3N {10gf ～ 130gf}
   (PEELING DIRECTION AS SHOWN IN FOLLOWING FIG.)
   THIS REQUIREMENT SHOULD BE APPLIED AT SHIPMENT
   PEEL OFF SHOULD NOT BE ALLOWED, DURING TRANSPORTATION

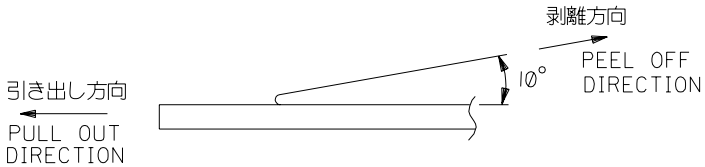

4. 材料
   キャリアテープ：ポリプロピレン（PP）
   トップテープ：PET，PE，PEF
   リール：ポリスチレン（PS）
   <リサイクル材を含む>

   MATERIAL
   CARRIER TAPE:POLYPROPYLENE
   TOP TAPE:PET,PE,PEF
   REEL:POLYSTYRENE(PS)
   <RECYCLE MATERIAL CONTAINED>
5. 本製品は 52365-**91 の鉛フリー品である。
   THIS PRODUCT IS LEAD FREE OF 52365-**91.

16	21.4	17.4	4.1	4.6	7	9.9	52365-0671	6
キャリアテープ幅 CARRIER TAPE WIDTH	F	E	(D)	(C)	(B)	(A)	MATERIAL NO.	極数 CIRCUIT

MODEL NO.	52365-**71	DIMENSIONS:	SHT	REV
DESIGN UNITS ☒mm ☐INCH	THIRD ANGLE PROJECTION	☐ mm/INCH ☐ INCH/mm ☒ mm ONLY	REVISE ON CAD ONLY	

GENERAL TOLERANCES: (UNLESS SPECIFIED) 一般公差		SCALE —#—	TITLE: 1.0 B-To-B Hsg Assy Str SMT Embstp Pkg -LEAD FREE-
10 UNDER 未満	±0.2	DRAWN BY & DATE Y.WADA '04/05/07	
10 OVER 以上 30 UNDER 未満	±0.25	CHECKED BY & DATE M.SASAO '04/05/07	
30 OVER 以上	±0.3	APPROVED BY & DATE M.SASAO '04/05/07	molex MOLEX INCORPORATED
ANGLE 角度	±3°	CAD FILENAME SD-52365-004.S01	MATERIAL NO. SEE CHART / DRAWING NO. SD-52365-004 / SHEET NO. 1 OF 2

MATERIAL 材料: 注記参照 SEE NOTES
FINISH 仕上げ: —#—
WIRE RANGE 適用電線範囲: —#—
INS. RANGE 被覆外径: —#—

REV	DESCRIPTION	EC NO.	DRWN	CH'K	APPR
0	RELEASED	J2004-4092	Y.WADA '04/05/07	M.SASAO '04/05/07	M.SASAO '04/05/07

DO NOT SCALE DRAWING

THIS DRAWING CONTAINS INFORMATION THAT IS PROPRIETARY TO MOLEX INCORPORATED AND SHOULD NOT BE USED WITHOUT WRITTEN PERMISSION.

SIZE B

DWG. NO. SD-52365-004

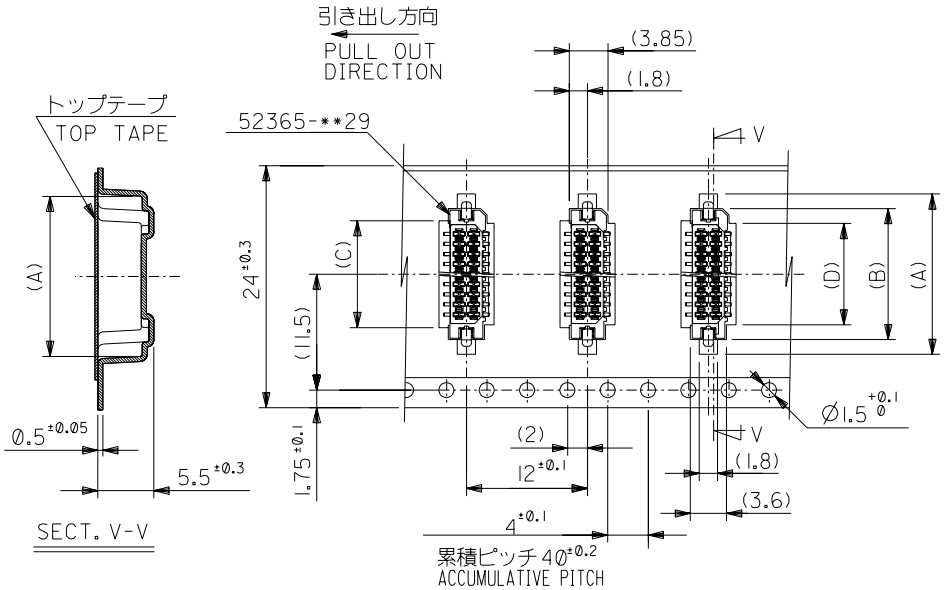

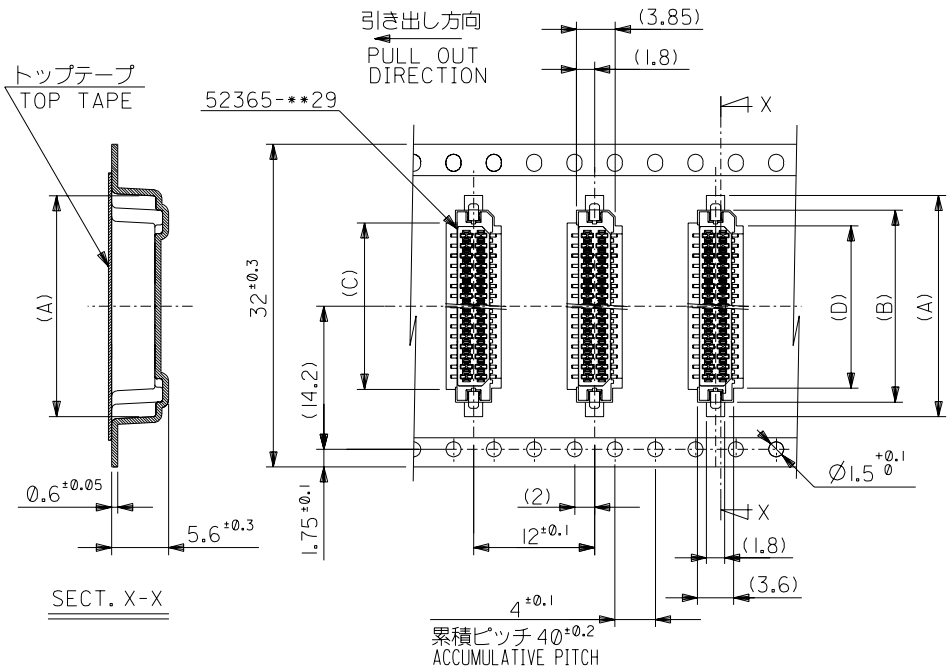

キャリアテープ幅 CARRIER TAPE WIDTH	F	E	(D)	(C)	(B)	(A)	MATERIAL NO.	極数 CIRCUIT
32	37.4	33.4	16.1	16.5	19.05	21.95	52365-3071	30
			15.1	15.5	18.05	20.95	52365-2871	28
			14.1	14.5	17.05	19.95	52365-2671	26
			13.1	13.5	16.05	18.95	52365-2471	24
24	29.4	25.4	12.1	12.6	15	17.9	52365-2271	22
			11.1	11.6	14	16.9	52365-2071	20
			10.1	10.6	13	15.9	52365-1871	18
			9.1	9.6	12	14.9	52365-1671	16
			8.1	8.6	11	13.9	52365-1471	14
			7.1	7.6	10	12.9	52365-1271	12
			6.1	6.6	9	11.9	52365-1071	10
			5.1	5.6	8	10.9	52365-0871	8

DO NOT SCALE DRAWING

EC NO.			
DRWN:			
CH'K:			
APPR:			
RELEASED	EC NO. J2004-4092	DRWN: Y.WADA '04/05/07	CH'K: M.SASAO '04/05/07	APPR: M.SASAO '04/05/07
REV	0	DESCRIPTION	

MATERIAL 材料: SHEET 1 OF 2 参照 REFER TO SHEET 1 OF 2

FINISH 仕上げ: —#

WIRE RANGE 適用電線範囲: —#

INS. RANGE 被覆外径: —#

GENERAL TOLERANCES: (UNLESS SPECIFIED) 一般公差

10 UNDER 未満		±0.2
10 OVER 以上 30 UNDER 未満		±0.25
30 OVER 以上		±0.3
ANGLE 角度		±3°

SCALE —#

DRAWN BY & DATE: Y.WADA '04/05/07

CHECKED BY & DATE: M.SASAO '04/05/07

APPROVED BY & DATE: M.SASAO '04/05/07

CAD FILENAME: SD-52365-004.S02

MODEL NO. 52365-**71

DESIGN UNITS: ☒mm ☐INCH

THIRD ANGLE PROJECTION

DIMENSIONS: ☐ mm/INCH ☐ INCH/mm ☒ mm ONLY

SHT | REV

REVISE ON CAD ONLY

TITLE: 1.0 B-To-B Hsg Assy Str SMT Embstp Pkg -LEAD FREE-

molex MOLEX INCORPORATED

MATERIAL NO. SEE CHART

DRAWING NO. SD-52365-004

SHEET NO. 2 OF 2

SIZE B

THIS DRAWING CONTAINS INFORMATION THAT IS PROPRIETARY TO MOLEX INCORPORATED AND SHOULD NOT BE USED WITHOUT WRITTEN PERMISSION.