THIS DRAWING IS UNPUBLISHED. RELEASED FOR PUBLICATION -
© COPYRIGHT 20 BY - ALL RIGHTS RESERVED.

REVISIONS

P	LTR	DESCRIPTION	DATE	DWN	APVD
	E	REV; ECO-14-003194	04MAR2014	GG	RA

1. MATERIAL:
   UL 94V-0 ABS MOLDING COMPOUND. SEE TABLE. FOR COLOR.

2. DIMENSIONS ARE NOMINAL UNLESS OTHERWISE SPECIFIED.

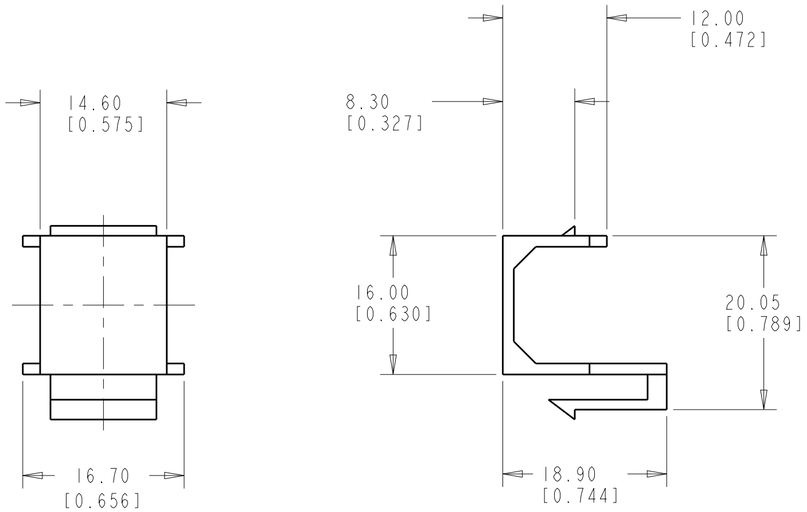

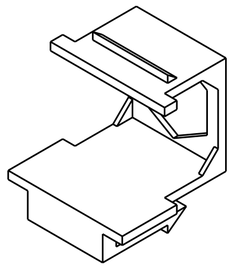

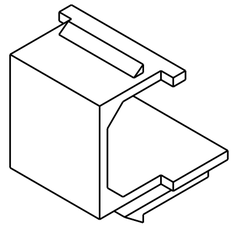

COLOR	PART NO
ALPINE WHITE	1-1933172-3
LIGHT ALMOND	1933172-1

THIS DRAWING IS A CONTROLLED DOCUMENT.

DIMENSIONS: mm[INCHES]

TOLERANCES UNLESS OTHERWISE SPECIFIED:
0 PLC ±-
1 PLC ±-
2 PLC ±-
3 PLC ±-
4 PLC ±-
ANGLES ±-

MATERIAL - -

FINISH - -

DWN J MCNEAL 13NOV2006
CHK G BOWMAN 13NOV2006
APVD G BOWMAN 13NOV2006

PRODUCT SPEC -

APPLICATION SPEC -

WEIGHT -

TE Connectivity

NAME INSERT, BLANK, KL SERIES - -

SIZE	CAGE CODE	DRAWING NO	RESTRICTED TO
A2	00779	C-1933172	-

Customer Drawing

SCALE 4:1 SHEET 1 OF 1 REV E