THIS DRAWING IS UNPUBLISHED. RELEASED FOR PUBLICATION -,- .
© COPYRIGHT - By - ALL RIGHTS RESERVED.

LOC	DIST
—	—

REVISIONS

P	LTR	DESCRIPTION	DATE	DWN	APVD
	F	PLATING CHANGE TO PdNi + Au FLASH AT AREA F	19MAY2014	KJK	JK

POS. PER ROW "n"	L±0.4	PART NO.
2	4.58	829 538 -2
3	7.12	829 538 -3
4	9.66	829 538 -4
5	12.20	829 538 -5
6	14.74	829 538 -6
7	17.28	829 538 -7
8	19.82	829 538 -8
15	37.60	1- 829 538 -5

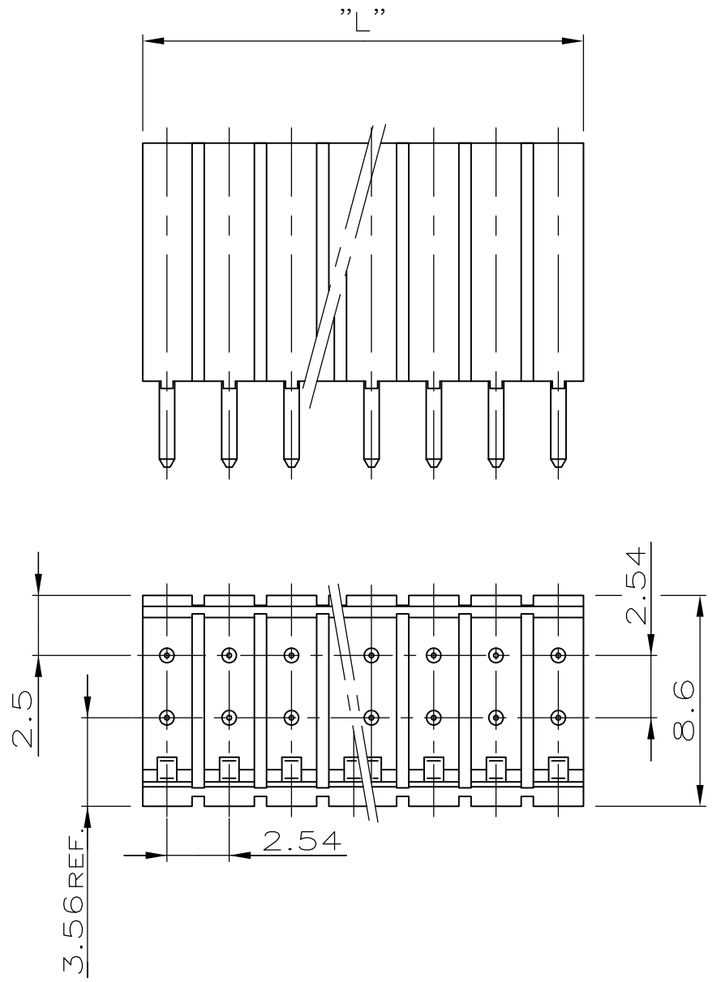

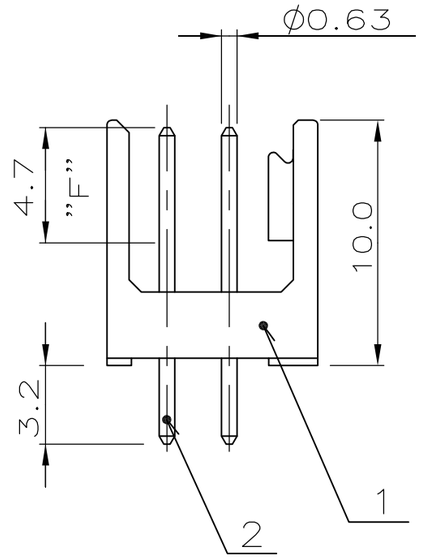

NOTES:

1. MATING SIDE AT AREA "F"
MIN. 0.7µm PdNi + 0.1µm GOLD FLASH
OVER 1.27µm NICKEL
SOLDER SIDE: MIN. 3.0µm TIN OVER 1.27µm NICKEL

POS.	BENENNUNG EINZELTEIL	WERKSTOFF	1
2	CONTACT PIN KONTAKTSTIFT	CuZn	
1	PIN HOUSING STIFTGEHÄUSE	PA 4/6	BLACK SCHWARZ
			OBERFLÄCHE
[ITEM NO.]	[DESCRIPTION]	[MATERIAL]	FARBE [FINISH]

THIS DRAWING IS A CONTROLLED DOCUMENT.

DIMENSIONS: mm

TOLERANCES UNLESS OTHERWISE SPECIFIED: ±0.2mm
0 PLC ± -
1 PLC ± -
2 PLC ± -
3 PLC ± -
4 PLC ± -
ANGLES ± -

MATERIAL: SEE TABLE
FINISH: SEE TABLE

DWN MULLER 09.02.90
CHK SCHAARSCHMIDT 12.02.90
APVD —
PRODUCT SPEC 108-18012
APPLICATION SPEC —
WEIGHT —

TE Connectivity

NAME: AMPMODU II PIN HEADER, DUAL ROW

SIZE	CAGE CODE	DRAWING NO	RESTRICTED TO
A3	00779	C-829538	—

CUSTOMER DRAWING | SCALE 4:1 | SHEET 1 OF 1 | REV F