FO-55113-B

HONEYWELL PART NUMBER
SNDH-T4C-G01

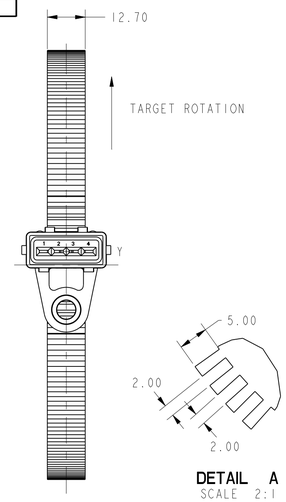

DETAIL A
SCALE 2:1

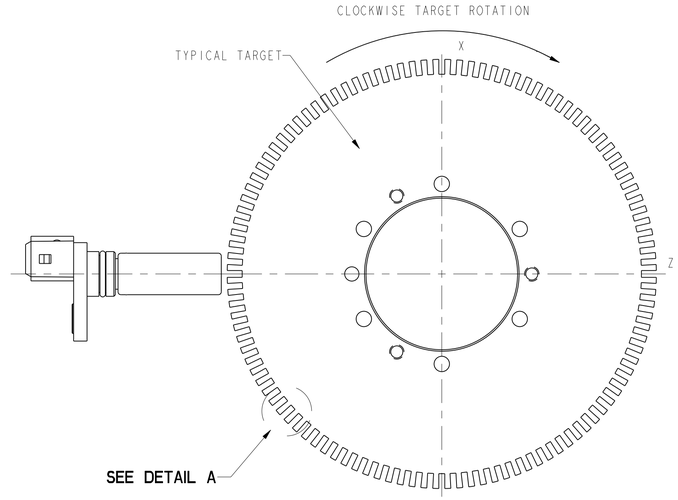

BLOCK DIAGRAM

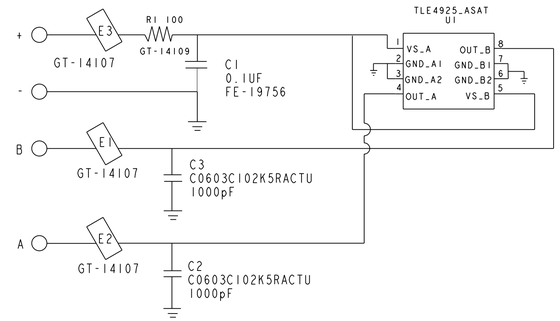

NOTES
1 - MATERIALS:
CONNECTOR = THERMOPLASTIC VALOX K4560
BUSHING = MACHINED BRASS
O-RING = FLUOROCARBON (VITON)
TERMINALS = NICKEL-TIN PLATED C51000 (PHOSBRONZE)
HOUSING = 304 STAINLESS STEEL

2 - CONNECTOR MATES WITH AMP PART NUMBER C-282192

3 - RECOMMENDED MOUNTING BORE $15.05^{+0.10}_{-0.00}$

REV	DOCUMENT	CHANGED BY	CHECK
F	0042512	SS 11AUG08	BLR

SPECIFICATIONS		
MECHANICAL CONDITIONS		
CONDITION	LIMITS	COMMENTS
SENSING AIR GAP	0.0 - 2.0 MM	MAY ACHIEVE LARGER GAPS WITH TESTING OF ACTUAL TARGET
TARGET TOOTH WIDTH	2.0 MM (RECOMMENDED)	OTHER GEOMETRY MAY BE SUITABLE
TARGET SLOT WIDTH	2.0 MM (RECOMMENDED)	OTHER GEOMETRY MAY BE SUITABLE
TOOTH HEIGHT	> 3.0MM (RECOMMENDED	SHORTER TOOTH HEIGHTS MAY LIMIT MAX AIR GAP PERFORMANCE
TARGET WIDTH	> 5 MM (RECOMMENDED)	NARROWER TARGETS MAY LIMIT AXIAL OFFSETS
SENSOR MISPOSITION TO TARGET	+/- 1.5 MM	DEPENDENT ON TARGET GEOMETRY
ELECTRICAL CONDITIONS		
CONDITION	LIMITS	COMMENTS
SUPPLY VOLTAGE	4.5 - 18 V	
MAX CONTINUOUS SUPPLY VOLTAGE	18V	
OUTPUT SIGNAL:		
SIGNAL TYPE	SQUARE WAVE	2 CHANNEL, PHASE SHIFTED BY 90 DEG. EITHER CHANNEL CAN LEAD OR LAG.
DUTY CYCLE	50 % +/- 10%	
PHASE SHIFT	90° ± 20°	NOMINAL MAY BE VARIED IF REQUIRED
OUTPUT HIGH	>/= VS - 0.5 VOLTS	
OUTPUT LOW	</= 0.5 VOLTS	
LOAD CURRENT	20 MA MAX	EACH OUTPUT AT ALL CONDITIONS
RISE TIME	10 US (TYPICAL)	DEPENDENT ON LOAD RESISTOR
FALL TIME	1US (TYPICAL)	
FREQUENCY	0 TO 15 KHZ	HIGHER FREQUENCIES ABOVE 10KHZ MAY BE DEPENDANT ON TARGET GEOMETRY AND AIR GAP.
SHORT CIRCUIT PROTECTION	80MA	
SUPPLY:		
CURRENT (NORMAL)	13.6MA	ALL CONDITIONS
CURRENT (MAX)	18 MA	ALL CONDITIONS
REVERSE VOLTAGE	-18V MAX	CONTINOUS
ENVIRONMENTAL CONDITIONS		
CONDITION	TEST PARAMETER	COMMENTS
EMI:		
RADIATED IMMUNITY	100 V/M PEAK	400-2GHZ
BULK CURRENT INJECTION	60 MA	20-400MHZ
ESD	16/8 KV AIR/CONTACT	AGAINST THE CONNECTOR (150PF, 330OHMS)
FAST TRANSIENT BURST	EN-61000-4-4 LEVEL 4	
EMISSION	EN-61000-6-4	
AUTOMOTIVE TRANSIENT	ISO 7636/3, TEST PULSE A&B @ ± 80V	
OPERATING TEMPERATURE	-40° TO 150 °C	CONTINOUS
THERMOSHOCK	-40° TO 150 °C	AIR TO AIR, 1/2 HOUR DWELL, < 10S TRANSITION
HUMIDITY	168 HRS	95% HUMIDITY AT 90 C
SALT FOG	96 HOURS	DIN IEC 6872-11
THERMO SALINE DUNK	5 DUNKS	105C TO 0C AIR TO LIQUID, 5% SALINE
HIGH TEMP EXPOSURE W/POWER	1000 HRS @ 150 °C	
MECHANICAL SHOCK	50G	
VIBRATION	30G, 10 - 2KHZ	
RESISTANCE TO FLUIDS	GENERAL AUTOMOTIVE UNDER THE HOOD FLUIDS	

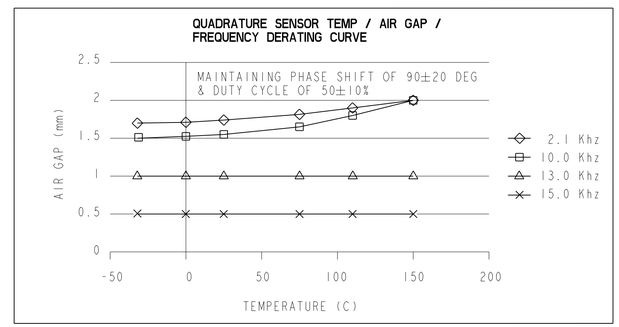

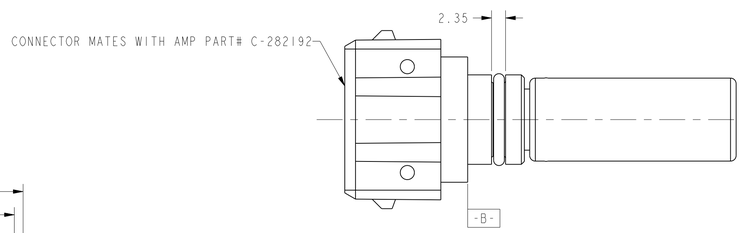

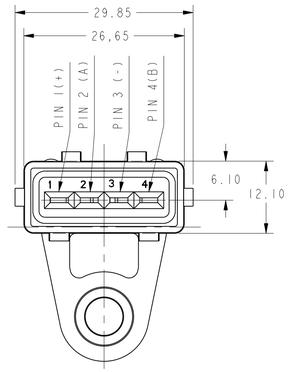

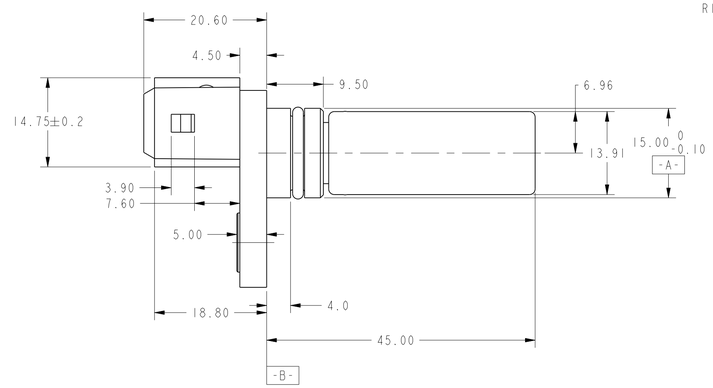

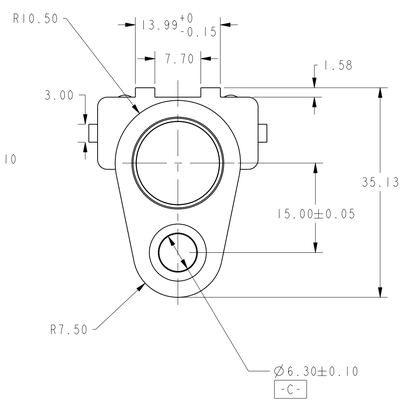

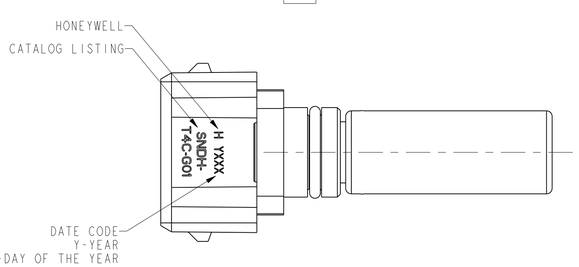

SENSOR OUTPUT
TARGET SPINNING CLOCKWISE

DESIGN UNITS: MM
TOLERANCES UNLESS NOTED:

NO PLACES	X	±	1
ONE PLACE	.X	±	0.4
TWO PLACE	.XX	±	0.15
THREE PLACE	.XXX	±	0.005
FOUR PLACE	.XXXX	±	0.0050
ANGLES	X	±	3

THIRD ANGLE PROJECTION

DRAWN	JLH	05MAR07
CHECK	JLH	05MAR07

THIS DRAWING COVERS A PROPRIETARY ITEM AND IS THE PROPERTY OF HONEYWELL. THIS DRAWING IS NOT TO BE COPIED OR USED WITHOUT THE PERMISSION OF HONEYWELL.

INTERPRET PER ***
OTHER HONEYWELL ENGINEERING STANDARDS MAY APPLY

Pro/ENGINEER 3D

Honeywell

TITLE
SENSOR, SPEED AND DIRECTION

SIZE	TYPE	DRAWING NAME	REV
D	I	SNDH-T4C-G01	F

SCALE 2:1
SHEET 1 OF 1