LT-Series

The LT-Series illuminated toggle switches feature a three-color lighting sequence from a single lamp. These lighted toggles contain neoprene bushing seals for dust and moisture protection. A variety of circuits and terminations are available.

Specifications

- Dielectric Strength: 1,000 V (minimum)
- Insulation Resistance: 100 Megohms (minimum)
- Base Material: Phenolic
- Actuator Material: Polycarbonate
- Bushing Material: Polycarbonate

Dimensional Specifications: in. [mm]

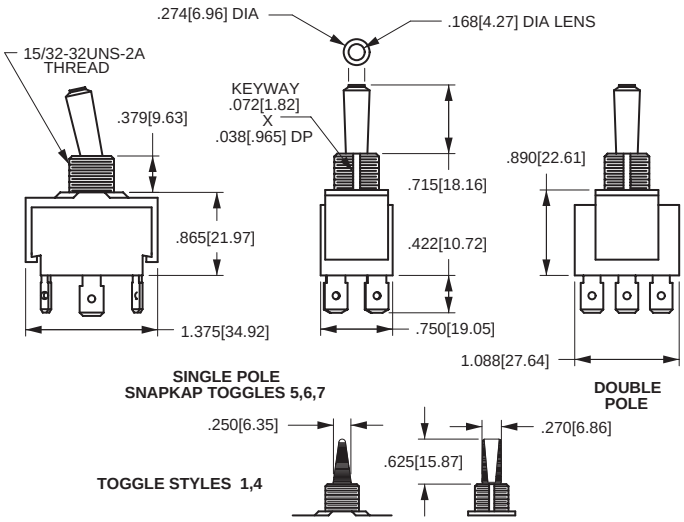

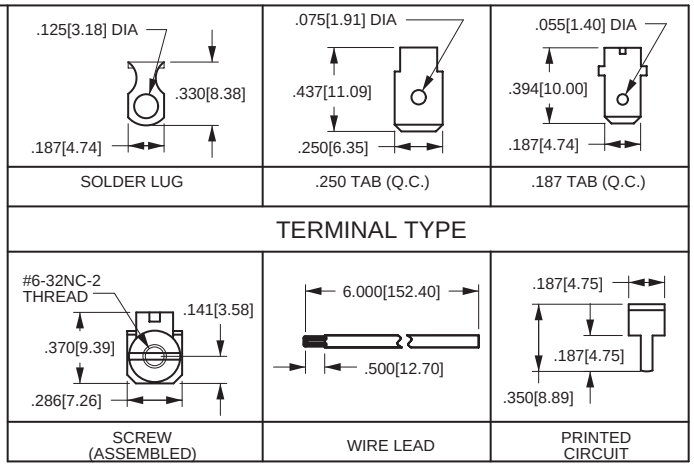

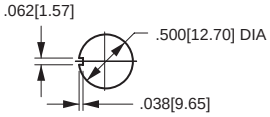

MOUNTING HOLE
Keyway should point down for maximum water resistance

LT - 1 5 6 1 - 1 13 - 012

SERIES

LT LIGHTED TOGGLE

POLES

1	SINGLE POLE IN A DOUBLE POLE BASE
2	DOUBLE POLE IN A TRIPLE POLE BASE

RATING

5	10A 250VAC 15A 125VAC 3/4HP 125-250VAC

CIRCUIT

1	ON-NONE-OFF
2	ON-NONE-(OFF)
3	(ON)-NONE-OFF
4	ON-NONE-ON
5	ON-NONE-(ON)
6	ON-OFF-ON
7	ON-OFF-(ON)
8	(ON)-OFF-(ON)

TERMINATION

0	SOLDER LUG
1	.250TAB (QC)
3	.187TAB (QC)
4	SCREW TERM.
5	WIRE LEAD
6	PC TERM.

LIGHTING SEQUENCE[3]

	POS 1	POS 2	POS 3
01	RED	RED	RED
02	AMBER	AMBER	AMBER
03	GREEN	GREEN	GREEN
10	RED	-----	NONE
11	RED	CLEAR	RED
12	RED	CLEAR	AMBER
13	RED	CLEAR	GREEN
14	RED	CLEAR	BLUE
15	RED	CLEAR	CLEAR
20	AMBER	-----	NONE
21	AMBER	CLEAR	RED
22	AMBER	CLEAR	AMBER
23	AMBER	CLEAR	GREEN
24	AMBER	CLEAR	BLUE
25	AMBER	CLEAR	CLEAR
30	GREEN	-----	NONE
31	GREEN	CLEAR	RED
32	GREEN	CLEAR	AMBER
33	GREEN	CLEAR	GREEN
34	GREEN	CLEAR	BLUE
35	GREEN	CLEAR	CLEAR
40	BLUE	-----	NONE
41	BLUE	CLEAR	RED
42	BLUE	CLEAR	AMBER
43	BLUE	CLEAR	GREEN
44	BLUE	CLEAR	BLUE
45	BLUE	CLEAR	CLEAR
50	CLEAR	-----	NONE
51	CLEAR	CLEAR	RED
52	CLEAR	CLEAR	AMBER
53	CLEAR	CLEAR	GREEN
54	CLEAR	CLEAR	BLUE
55	CLEAR	CLEAR	CLEAR

TOGGLE STYLE

PADDLE[1]

1	CLEAR
4	SOLID COLOR

SNAPKAP[2]

5	BRIGHT CHROME
6	SATIN CHROME
7	BLACK MOLDED

LAMP VOLTAGE[4]

006	6V
012	12V
018	18V
024	24V
125	125N
250	250N

NOTES:
Shading indicates standard configurations.
1 Solid color paddle available with lighting sequence 01, 02, 10 or 20.
2 SnapKap Toggle Lenses are available separately. Consult factory.
3 Independent lamp is standard. Dependent lamp with ON-OFF function (including momentary) is available with Lighting Sequences 10, 20, 30, 40 and 50. No light in OFF position.
4 Green and blue not recommended with 125 volt or 250 volt neon lamps.