THIS DRAWING IS UNPUBLISHED. RELEASED FOR PUBLICATION -,- .
© COPYRIGHT - By - ALL RIGHTS RESERVED.

LOC	DIST
FT	0

REVISIONS

P	LTR	DESCRIPTION	DATE	DWN	APVD
	N3	REVISED PER ECO-11-004587	11MAR11	RK	HMR

1 PART PACKAGED UNASSEMBLED.

2 CABLE CLAMPING AREA ADJUSTABLE FROM .010 TO .161 SQ IN BY REVERSING CLAMPING INSERTS. (2 INSERTS SUPPLIED)

3 CABLE CLAMPING AREA ADJUSTABLE FROM .010 TO .161 SQ IN BY CHANGING CLAMPING INSERTS. (4 INSERTS SUPPLIED, -4 ONLY)

4 .453 MAXIMUM CABLE OUTSIDE DIAMETER.

5 BULK PACKAGED KITS TO BE ORDERED IN MULTIPLES OF 200 ONLY.

6 NON-HEXAVALENT CHROMATE FINISH.

7 OBSOLETE PARTS: OBSOLETE CIS STREAMLINING PER D.RENAUD/D.SINISI

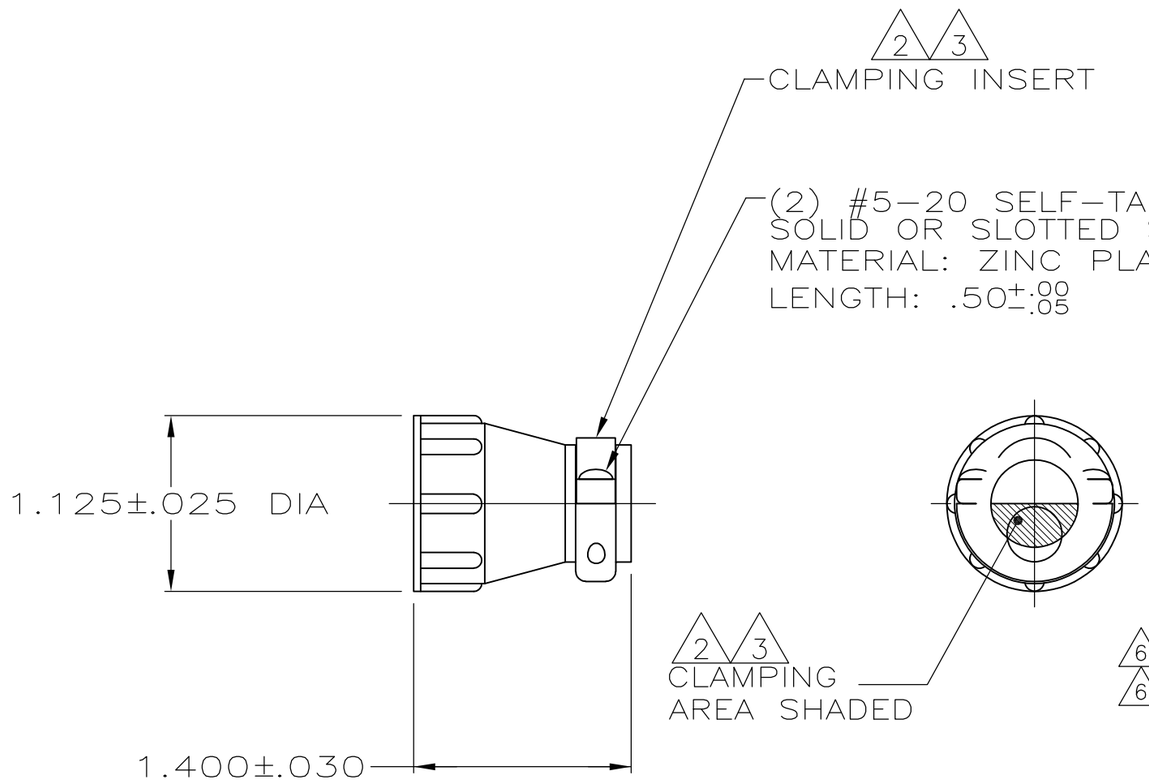

6		INDIVIDUAL	1-206070-1
2 6		5 BULK	1-206070-0
2 6 7	OBSOLETE	SMALL PACK	~~206070-9~~
2 6		INDIVIDUAL	206070-8
6 7	OBSOLETE	INDIVIDUAL	~~206070-7~~
6 7	OBSOLETE	SMALL PACK	~~206070-6~~
	OBSOLETE	~~5 BULK~~	~~206070-4~~
6 2	SUPERSEDED BY 1-206070-0	5 BULK	206070-3
6 2	SUPERSEDED BY 206070-8	INDIVIDUAL	206070-1
		PACKAGING	PART NUMBER

THIS DRAWING IS A CONTROLLED DOCUMENT.

DIMENSIONS: INCHES

TOLERANCES UNLESS OTHERWISE SPECIFIED:
0 PLC ± -
1 PLC ± -
2 PLC ± -
3 PLC ± -
4 PLC ± -
ANGLES ± -

MATERIAL: THERMOPLASTIC

FINISH: -

DWN A GRAFF 4/23/91
CHK W.G.LENKER 7-22-92
APVD -
PRODUCT SPEC 108-10024
APPLICATION SPEC -
WEIGHT -

CUSTOMER DRAWING

TE Connectivity

NAME: CABLE CLAMP KIT, STANDARD, SHELL SIZE 17, CPC

SIZE	CAGE CODE	DRAWING NO	RESTRICTED TO
A3	00779	C-206070	-

SCALE NTS SHEET 1 OF 1 REV N3