Alle Rechte vorbehalten/ *All rights reserved*

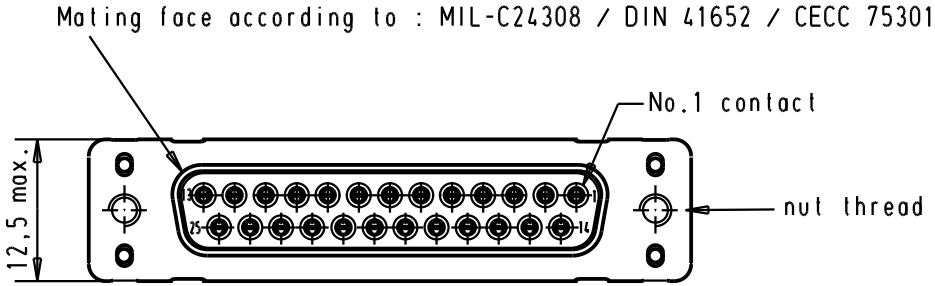

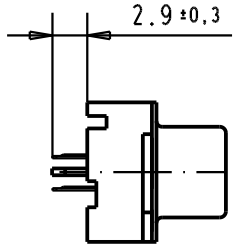

Printed board layout
component side

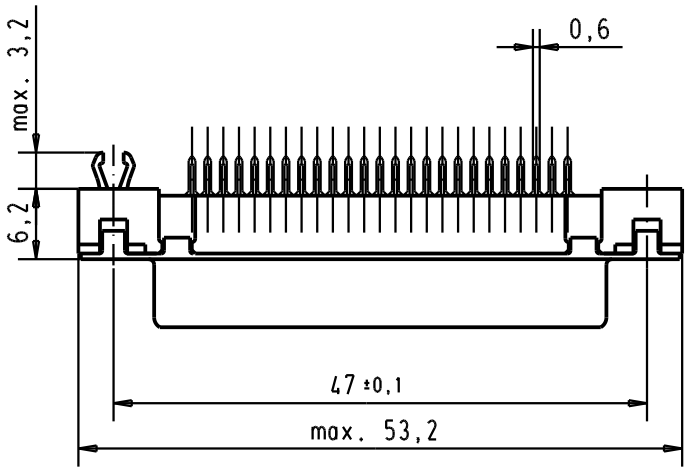

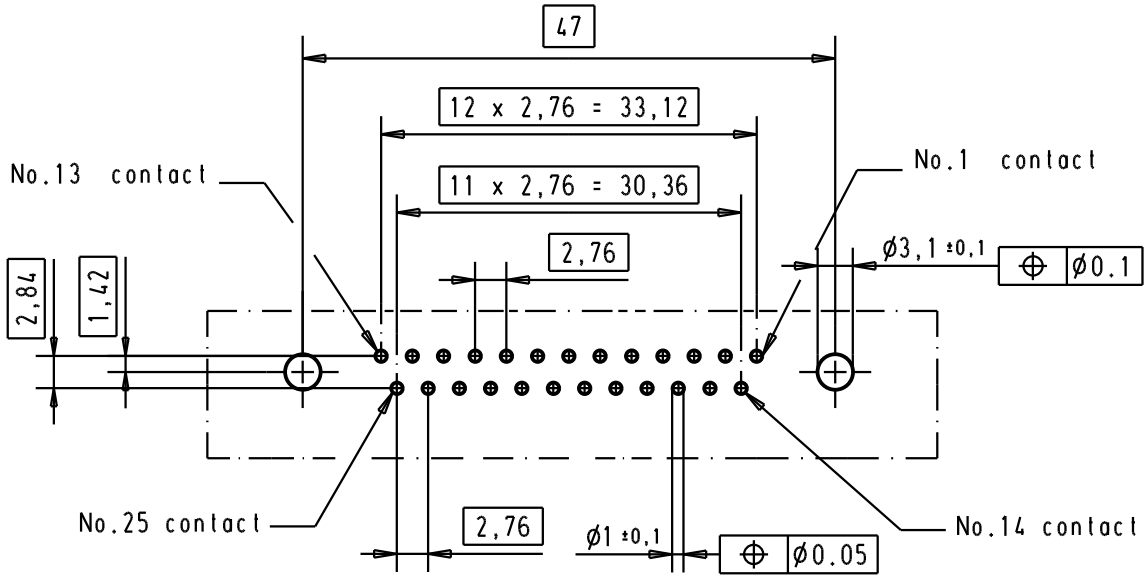

Connector retention and insertion forces on the PCB = 25 / 80 newtons

Part number	Nut thread	Performance level	Mod.	Dat.	Name
09 66 351 3511	M3	1			
09 66 351 6511	M3	2			
09 66 351 7511	M3	3			
09 66 351 3512	4-40 UNC	1	31892	05/05/04	JH
09 66 351 6512	4-40 UNC	2	31523	11-JUL-03	TCP
09 66 351 7512	4-40 UNC	3	29723	05-MAR-02	CV

	Dat.	Name
Detail.	05-MAR-02	CV
Insp.		
Stand.		

All Dim. in mm
Orig. Size DIN A 4

D-sub, 25 poles,
female, straight,
with solder pins 2.9, nuts
and grounding board lock

Maßstab/ *Scale* 1,5:1

HARTING EURL
F-95972 Paris

TB 09 66 351 x51x

Sub.

Blatt/ *Page* 1