THIS DRAWING IS UNPUBLISHED. RELEASED FOR PUBLICATION – ,– .
© COPYRIGHT – By – ALL RIGHTS RESERVED.

| LOC | DIST |
|---|---|
| H | — |

REVISIONS

| P | LTR | DESCRIPTION | DATE | DWN | APVD |
|---|---|---|---|---|---|
| | A | INITIAL RELEASE | 16NOV2013 | YC | BvH |
| | A1 | ECR–14–011671 | 16AUG2014 | GSK | BvH |
| | A2 | ECR–15–008219 | 01JUN2015 | GSK | BvH |

NOTES:
Tolerances cable lengths:

| | |
|---|---|
| 0m to 0.5m | +30mm |
| 0.5m to 1.0m | +50mm |
| 1.0m to 3.0m | +100mm |
| < 3.0m | +1.5% |

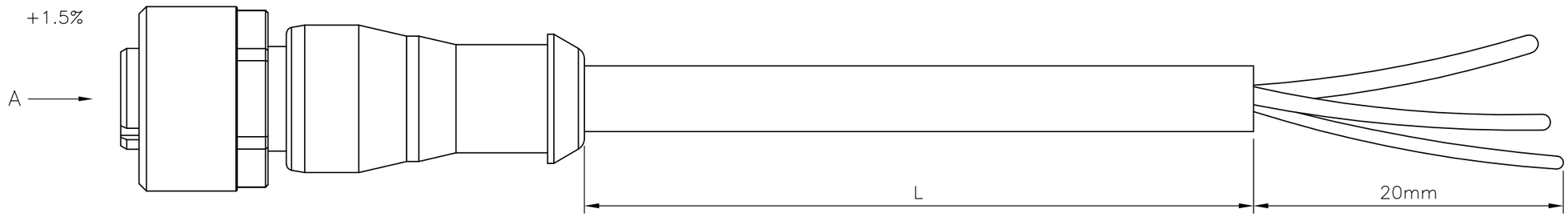


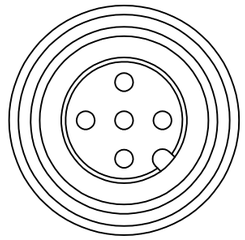

VIEW 'A'

Contact Layout
Female

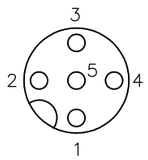


Schematic diagram

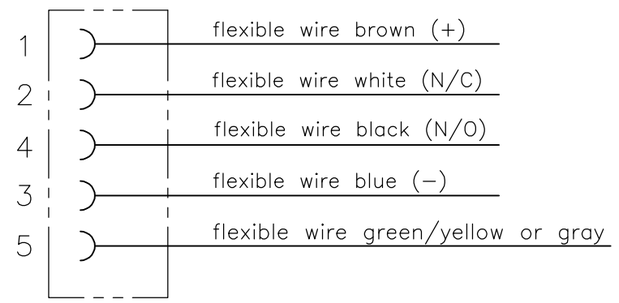


| TECHNICAL DATA | |
|---|---|
| Operating voltage | max. 125 V AC/DC |
| Operating current per contact | max. 4 A |
| Locking of ports | Screw thread M12 x 1 mm (recommended torque 0.6 Nm) self–securing |
| Protection | IP65 and IP67 when plugged and screwed down (EN 60529) |

| PUR CABLE | |
|---|---|
| No./diameter of wires | 5 x 0.34 mm² |
| Wire isolation | PP (br, wh, bl, bk, gnye) |
| C–track properties | yes |
| Jacket | PUR (UL/CSA) |
| Outer diameter | approx. 5.0 mm |
| Bend radius (moving) | 10 x outer diameter |
| Temperature range (fixed) | –50...+80 °C |
| Temperature range (mobile) | –25...+80 °C |

| PVC CABLE | |
|---|---|
| No./diameter of wires | 5 x 0.34 mm² |
| Wire isolation | PVC (br, wh, bl, bk, gnye) |
| C–track properties | |
| Jacket | PVC (UL/CSA) |
| Outer diameter | approx. 5.2 mm |
| Bend radius (moving) | 10 x outer diameter |
| Temperature range (fixed) | –30...+80 °C |
| Temperature range (mobile) | –5...+80 °C |

| LENGTH"L" | MATERIAL | JACKET COLOR | TE PN | DESCRIPTION | ITEM |
|---|---|---|---|---|---|
| 5 pos 30000mm | PVC | Black | 1–2273035–6 | 5x22AWG PVC 30.0m | 10 |
| 5 pos 20000mm | PVC | Black | 1–2273035–5 | 5x22AWG PVC 20.0m | 9 |
| 5 pos 10000mm | PVC | Black | 1–2273035–4 | 5x22AWG PVC 10.0m | 8 |
| 5 pos 5000mm | PVC | Black | 1–2273035–3 | 5x22AWG PVC 5.0m | 7 |
| 5 pos 3000mm | PVC | Black | 1–2273035–2 | 5x22AWG PVC 3.0m | 6 |
| 5 pos 1500mm | PVC | Black | 1–2273035–1 | 5x22AWG PVC 1.5m | 5 |
| 5 pos 10000mm | PUR | Black | 2273035–4 | 5x22AWG PUR 10.0m | 4 |
| 5 pos 5000mm | PUR | Black | 2273035–3 | 5x22AWG PUR 5.0m | 3 |
| 5 pos 3000mm | PUR | Black | 2273035–2 | 5x22AWG PUR 3.0m | 2 |
| 5 pos 1500mm | PUR | Black | 2273035–1 | 5x22AWG PUR 1.5m | 1 |

THIS DRAWING IS A CONTROLLED DOCUMENT.

DIMENSIONS: mm

TOLERANCES UNLESS OTHERWISE SPECIFIED:
0 PLC ± –
1 PLC ± –
2 PLC ± –
3 PLC ± –
4 PLC ± –
ANGLES ± –

MATERIAL –
FINISH –

DWN YATHISH.C 16NOV2013
CHK B.VELDHOVEN 16NOV2013
APVD A.VAN ZANDVOORT 16NOV2013
PRODUCT SPEC 108–19483
APPLICATION SPEC 114–32127
WEIGHT –

TE Connectivity

NAME M12 X 1.0 STRAIGHT SOCKET PIGT A
–

| SIZE | CAGE CODE | DRAWING NO | RESTRICTED TO |
|---|---|---|---|
| A3 | 00779 | C–2273035 | — |

CUSTOMER DRAWING | SCALE NTS | SHEET 1 OF 1 | REV A2