Alle Rechte vorbehalten/ *All rights reserved*

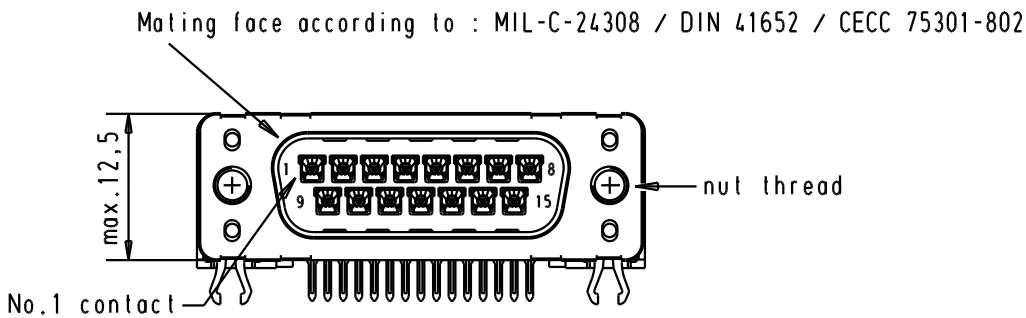


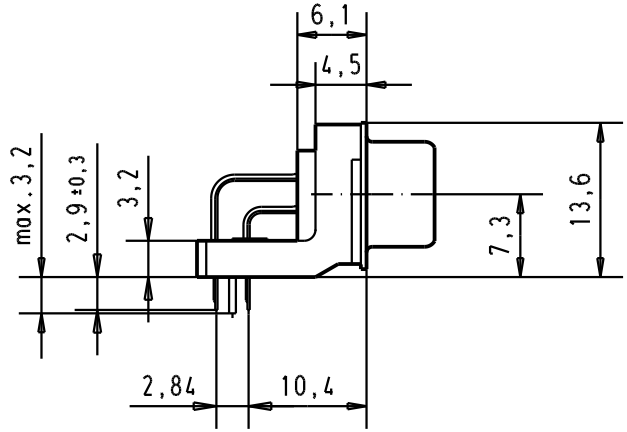


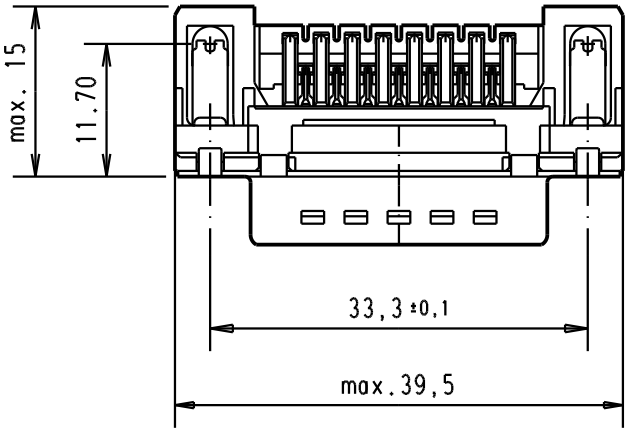


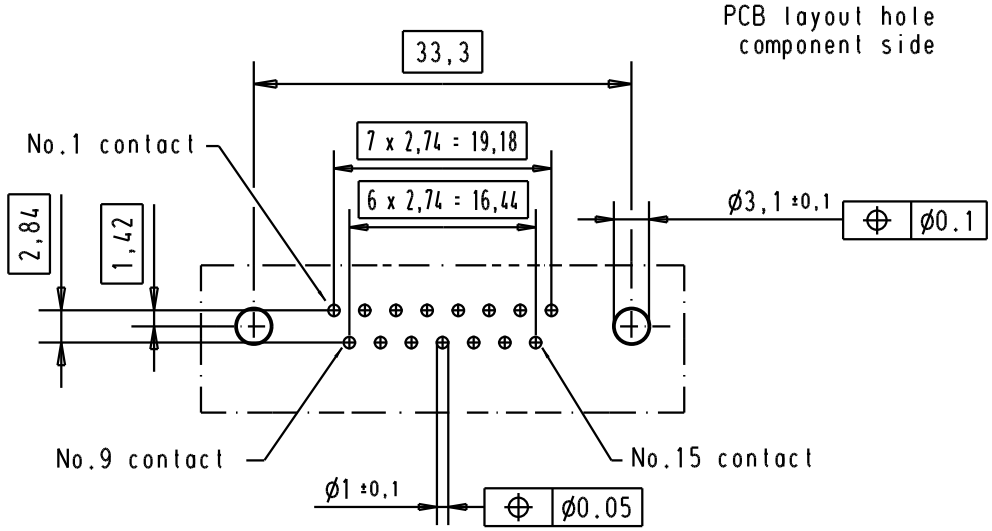


Connector retention and insertion forces on the PCB = 25 / 80 newtons

| Part number | Nut thread | Performance level | Mod. | Dat. | Name |
|---|---|---|---|---|---|
| 09 65 263 3811 | M3 | 1 | | | |
| 09 65 263 6811 | M3 | 2 | | | |
| 09 65 263 7811 | M3 | 3 | 31892 | 22/04/04 | JH |
| 09 65 263 3812 | 4-40 UNC | 1 | 31084 | 04/09/02 | YT |
| 09 65 263 6812 | 4-40 UNC | 2 | 29689 | 03/07/01 | AA |
| 09 65 263 7812 | 4-40 UNC | 3 | 27960 | 18/dec/00 | ALSPACE |

| | Dat. | Name |
|---|---|---|
| Detail. | 18/dec/00 | ALSPACE |
| Insp. | | |
| Stand. | | |

All Dim. in mm
Orig. Size DIN A 4

D-Sub, male, standard angle, 15 poles, with solder pin, nut and grounding board lock

Maßstab/ *Scale* 1.5:1

HARTING EURL
F-95972 Paris

TB 0965263x81x

Sub.

Blatt/ *Page* 2