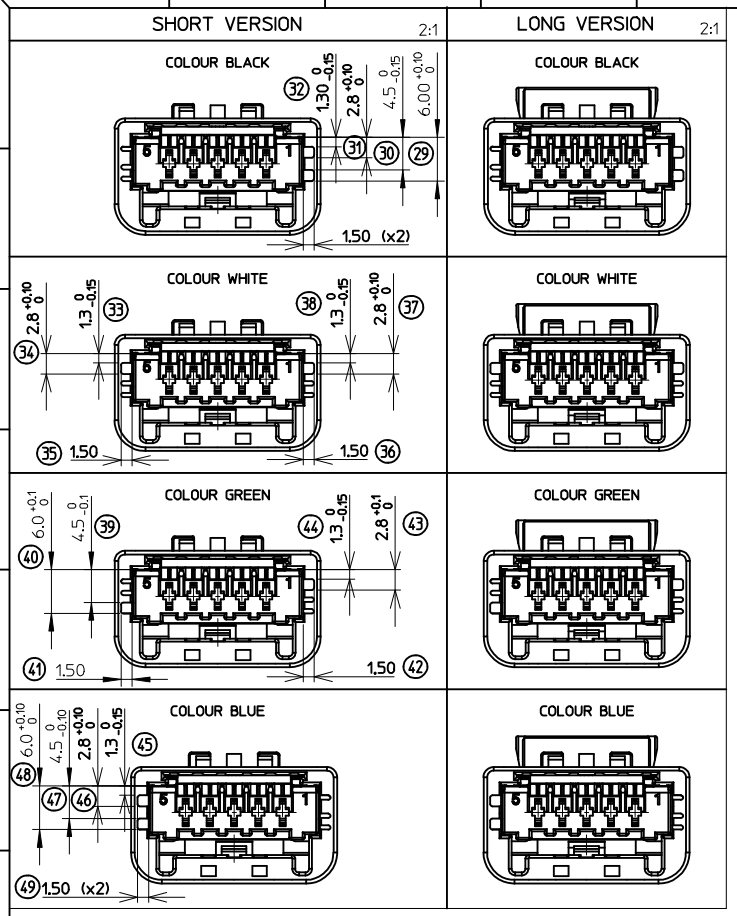

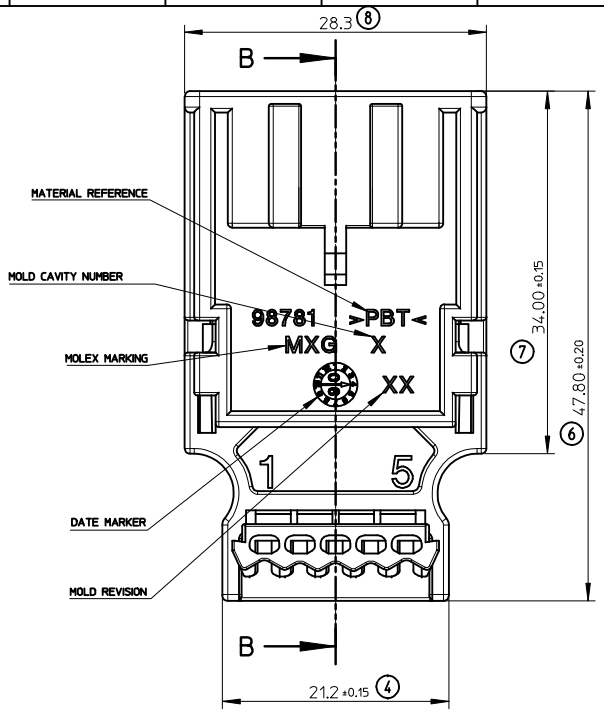

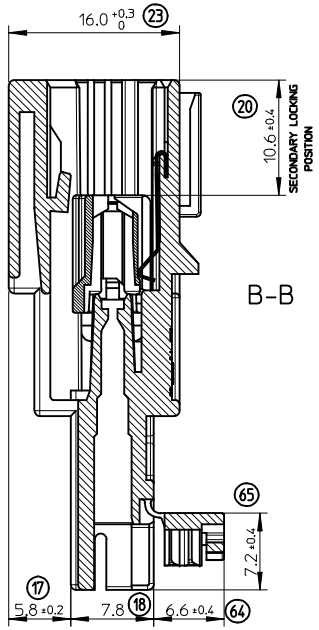

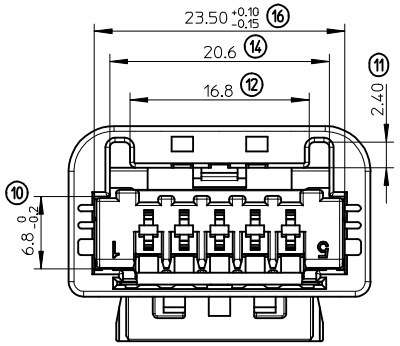

MALE CONNECTOR SHORT VERSION

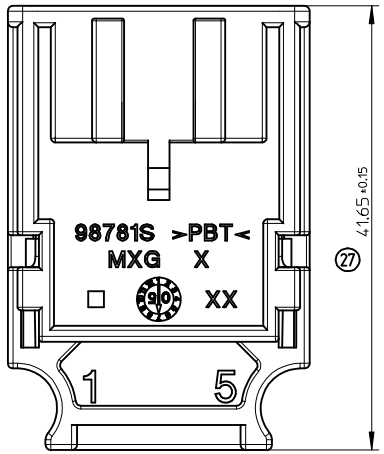

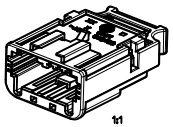

1:1
MALE CONNECTOR SHORT VERSION

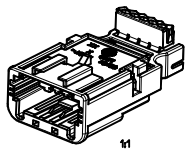

1:1
MALE CONNECTOR LONG VERSION

MOLEX PART NUMBER	DESIGNATION / VERSION	CODING / COLOUR	FEMALE HOUSING ASSOCIATED
0987811014	MALE HOUSING SHORT VERSION	BLUE	0987841014
0987811013	MALE HOUSING SHORT VERSION	GREEN	0987841013
0987811012	MALE HOUSING SHORT VERSION	WHITE	0987841012
0987811011	MALE HOUSING SHORT VERSION	BLACK	0987841011
0987811004	MALE HOUSING LONG VERSION	BLUE	0987841004
0987811003	MALE HOUSING LONG VERSION	GREEN	0987841003
0987811002	MALE HOUSING LONG VERSION	WHITE	0987841002
0987811001	MALE HOUSING LONG VERSION	BLACK	0987841001

INSPECTION BALLOON NUMBER LOG

PER DRAWING REVISION: 2
LAST BALLOON NUMBER USED: 65
ADDED BALLOON NUMBERS:
REMOVED BALLOON NUMBERS:

2	add slot review marking from "Revision of customer drawings" to "Mold cavity number and delete marking "Cavity reference mold"

NOTES :
1-FOR ILLUSTRATION PURPOSE THE MALE CONNECTOR LONG SHOWN IS THE WHITE VERSION (0987811002).
2-APPLICATION SPECIFICATION : AS-98781-005.
3-PART WEIGHT LONG VERSION: 9,9 g.
PART WEIGHT SHORT VERSION: 9,2 g.
4-PACKAGING SPECIFICATION : PK-98781-001

ADD SLOT AND REVIEW MARKINGS
EC NO: G2013-0207 2013/01/10
DRWN:VJOUAS 2013/01/11
CHKD:LBARRETO 2013/01/11
APPR:OPLESSIS 2013/01/23
REV 2 DESCRIPTION

QUALITY SYMBOLS
E_V=0
E_E=0
E_B=0

GENERAL TOLERANCES (UNLESS SPECIFIED)

	mm	INCH
4 PLACES	± ---	± ---
3 PLACES	± ---	± ---
2 PLACES	± 0.10	± ---
1 PLACE	± 0.15	± ---
0 PLACE	± 0.15	± ---
ANGULAR ± 2 °		

DRAFT WHERE APPLICABLE MUST REMAIN WITHIN DIMENSIONS

DIMENSION STYLE: MM ONLY
SCALE: 3:1
DESIGN UNITS: METRIC
FIRST ANGLE PROJECTION

DRAWN BY: VGUERIN DATE: 2009/03/23
CHECKED BY: OPLESSIS DATE: 2009/03/23
APPROVED BY: CBOUCHAN DATE: 2009/03/23

TITLE: MALE MODULE 5 WAY SALES DRAWING

molex

MATERIAL NO.: SEE TABLE
DOCUMENT NO.: SD-98781-001
SHEET NO.: 1 OF 1
SIZE: A2

THIS DRAWING CONTAINS INFORMATION THAT IS PROPRIETARY TO MOLEX INCORPORATED AND SHOULD NOT BE NOT BE USED WITHOUT WRITTEN PERMISSION

tb_frame_A2_P_AM_F
Rev. G 2012/01/11