HIGH VOLTAGE SURFACE MOUNT SWITCHING DIODE ARRAY

Features

- Two Series Diode Circuits Connect to Form Full Wave Bridge
- Fast Switching Speed
- Low Capacitance
- 400V Reverse Breakdown Voltage Rating
- **Totally Lead Free & Fully RoHS Compliant (Notes 1 & 2)**
- **Halogen and Antimony Free. "Green" Device (Note 3)**

Mechanical Data

- Case: SOT-26
- Case Material: Molded Plastic, "Green" Molding Compound. UL Flammability Classification Rating 94V-0
- Moisture Sensitivity: Level 1 per J-STD-020
- Terminals: Matte Tin Finish Annealed over Copper Leadframe (Lead Free Plating). Solderable per MIL-STD-202, Method 208 e3
- Polarity: See Diagram
- Weight: 0.016 grams (Approximate)

SOT-26

TOP VIEW

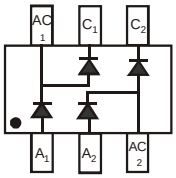

TOP VIEW
Internal Schematic

Ordering Information (Note 4)

Part Number	Case	Packaging
MMBD5004BRM-7	SOT-26	3,000/Tape & Reel

Notes:
1. No purposely added lead. Fully EU Directive 2002/95/EC (RoHS) & 2011/65/EU (RoHS 2) compliant.
2. See http://www.diodes.com/quality/lead_free.html for more information about Diodes Incorporated's definitions of Halogen- and Antimony-free, "Green" and Lead-free.
3. Halogen- and Antimony-free "Green" products are defined as those which contain <900ppm bromine, <900ppm chlorine (<1500ppm total Br + Cl) and <1000ppm antimony compounds.
4. Please see http://www.diodes.com/package-outlines.html for the latest version.

Marking Information

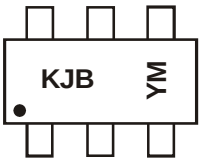

KJB = Product Type Marking Code
YM = Date Code Marking
Y = Year (ex: W = 2009)
M = Month (ex: 9 = September)

Date Code Key

Year	2009	2010	…	2016	2017	2018	2019
Code	W	X	…	D	E	F	G

Month	Jan	Feb	Mar	Apr	May	Jun	Jul	Aug	Sep	Oct	Nov	Dec
Code	1	2	3	4	5	6	7	8	9	O	N	D

© Diodes Incorporated

Maximum Ratings (@T_A = +25°C, unless otherwise specified.)

Characteristic	Symbol	Value	Unit
Repetitive Peak Reverse Voltage	V_{RRM}	400	V
Working Peak Reverse Voltage DC Blocking Voltage	V_{RWM} V_R	350	V
RMS Reverse Voltage	$V_{R(RMS)}$	247	V
Forward Continuous Current	I_F	225	mA
Peak Repetitive Forward Current	I_{FRM}	625	mA
Non-Repetitive Peak Forward Surge Current @ t = 1.0ms @ t = 1.0s	I_{FSM}	2.0 1.0	A

Thermal Characteristics

Characteristic	Symbol	Value	Unit
Power Dissipation (Note 5)	P_D	350	mW
Thermal Resistance Junction to Ambient Air (Note 5)	$R_{\theta JA}$	357	°C/W
Operating and Storage Temperature Range	T_J, T_{STG}	-65 to +150	°C

Electrical Characteristics (@T_A = +25°C, unless otherwise specified.)

Characteristic	Symbol	Min	Typ	Max	Unit	Test Condition
Reverse Breakdown Voltage (Note 6)	$V_{(BR)R}$	400	—	—	V	I_R = 150µA
Forward Voltage	V_F	—	— — —	0.93 1.10 1.29	V	I_F = 20mA I_F = 100mA I_F = 200mA
Reverse Current (Note 6)	I_R	—	— —	100 100 5	nA µA µA	V_R = 240V V_R = 240V, T_J = 150°C V_R = 360V
Total Capacitance	C_T	—	0.7	2.0	pF	V_R = 0V, f = 1.0MHz
Reverse Recovery Time	t_{rr}	—	—	50	ns	$I_F = I_R$ = 30mA, I_{rr} = 3.0mA, R_L = 100Ω

Notes:
5. Part mounted on polyimide substrate PC board with recommended pad layout, which can be found on our website at http://www.diodes.com/package- outlines.html.
6. Short duration pulse test used to minimize self-heating effect.

© Diodes Incorporated

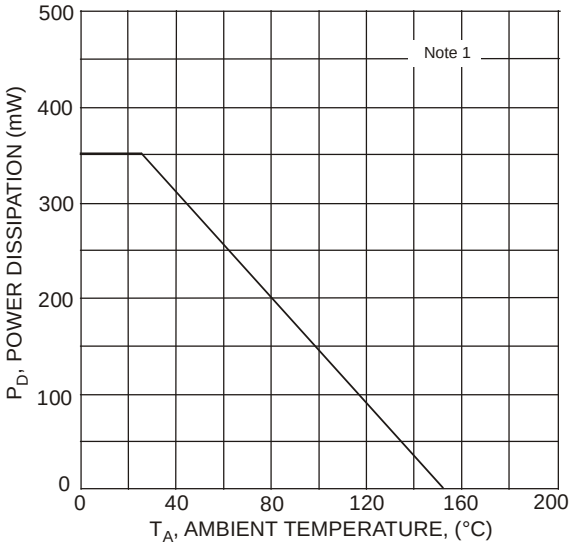

Fig. 1 Power Derating Curve, Total Package

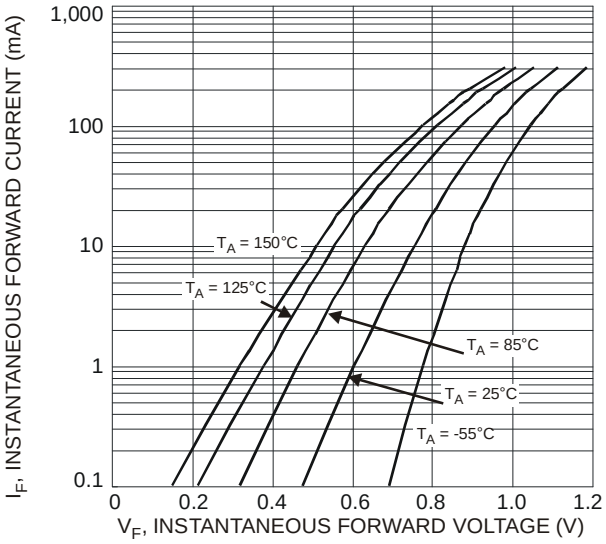

Fig. 2 Typical Forward Characteristics, Per Element

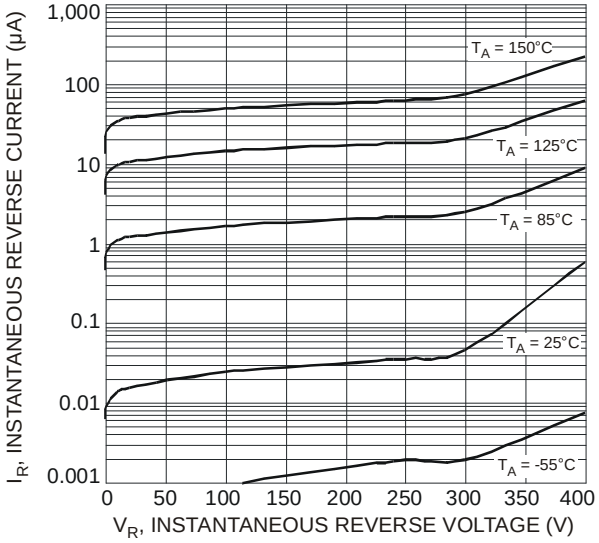

Fig. 3 Typical Reverse Characteristics, Per Element

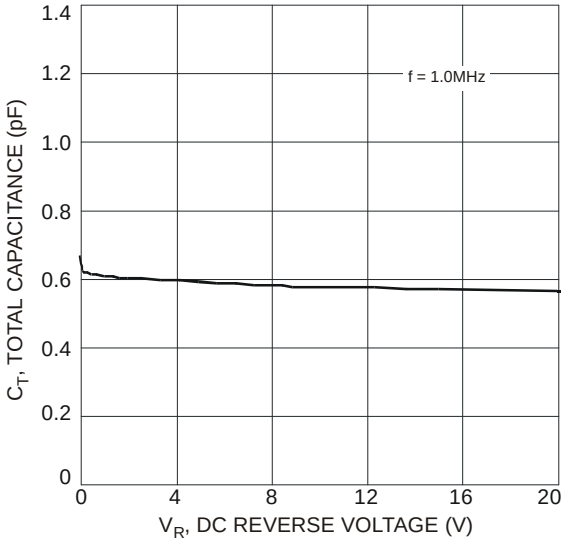

Fig. 4 Total Capacitance vs. Reverse Voltage, Per Element

© Diodes Incorporated

Package Outline Dimensions

Please see http://www.diodes.com/package-outlines.html for the latest version.

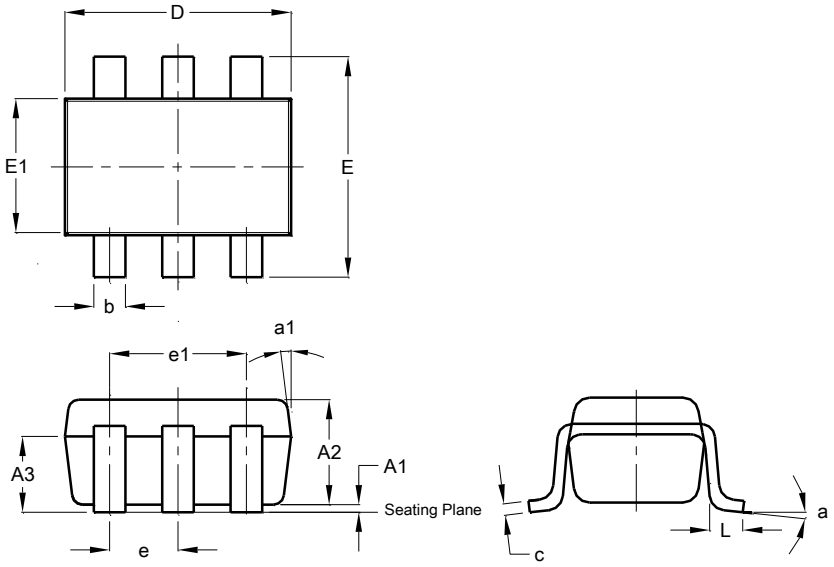

SOT26 / SC74R			
Dim	**Min**	**Max**	**Typ**
A1	0.013	0.10	0.05
A2	1.00	1.30	1.10
A3	0.70	0.80	0.75
b	0.35	0.50	0.38
c	0.10	0.20	0.15
D	2.90	3.10	3.00
e	-	-	0.95
e1	-	-	1.90
E	2.70	3.00	2.80
E1	1.50	1.70	1.60
L	0.35	0.55	0.40
a	-	-	8°
a1	-	-	7°
All Dimensions in mm			

Suggested Pad Layout

Please see http://www.diodes.com/package-outlines.html for the latest version.

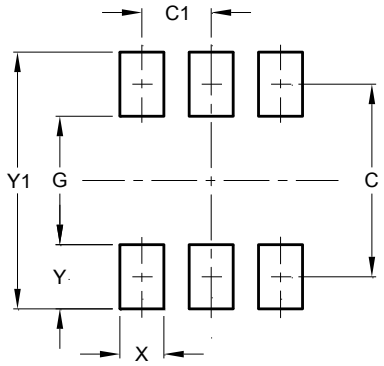

Dimensions	Value (in mm)
C	2.40
C1	0.95
G	1.60
X	0.55
Y	0.80
Y1	3.20

© Diodes Incorporated

Application Examples

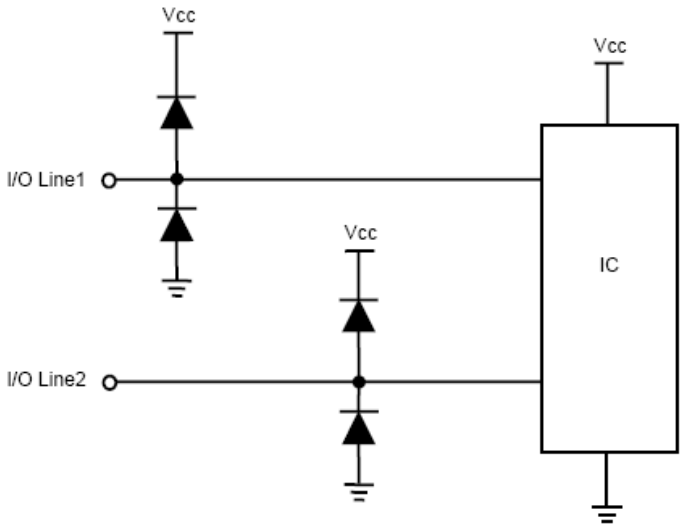

Figure 1. Typical Rail-to-Rail Protection

MMBD5004BRM

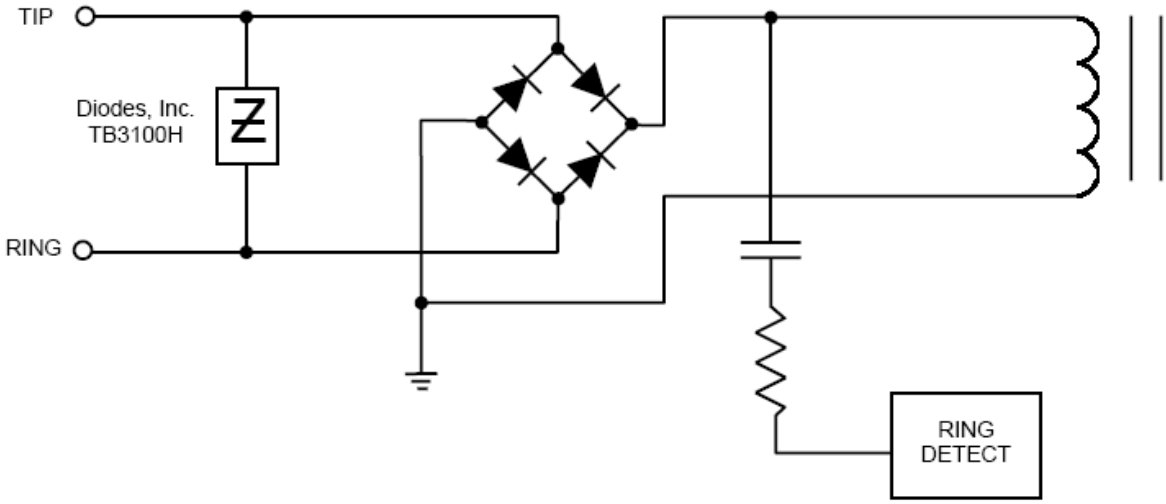

Figure 2. Typical Transformer Coupled Tip and Ring Interface

© Diodes Incorporated

IMPORTANT NOTICE

DIODES INCORPORATED MAKES NO WARRANTY OF ANY KIND, EXPRESS OR IMPLIED, WITH REGARDS TO THIS DOCUMENT, INCLUDING, BUT NOT LIMITED TO, THE IMPLIED WARRANTIES OF MERCHANTABILITY AND FITNESS FOR A PARTICULAR PURPOSE (AND THEIR EQUIVALENTS UNDER THE LAWS OF ANY JURISDICTION).

Diodes Incorporated and its subsidiaries reserve the right to make modifications, enhancements, improvements, corrections or other changes without further notice to this document and any product described herein. Diodes Incorporated does not assume any liability arising out of the application or use of this document or any product described herein; neither does Diodes Incorporated convey any license under its patent or trademark rights, nor the rights of others. Any Customer or user of this document or products described herein in such applications shall assume all risks of such use and will agree to hold Diodes Incorporated and all the companies whose products are represented on Diodes Incorporated website, harmless against all damages.

Diodes Incorporated does not warrant or accept any liability whatsoever in respect of any products purchased through unauthorized sales channel. Should Customers purchase or use Diodes Incorporated products for any unintended or unauthorized application, Customers shall indemnify and hold Diodes Incorporated and its representatives harmless against all claims, damages, expenses, and attorney fees arising out of, directly or indirectly, any claim of personal injury or death associated with such unintended or unauthorized application.

Products described herein may be covered by one or more United States, international or foreign patents pending. Product names and markings noted herein may also be covered by one or more United States, international or foreign trademarks.

This document is written in English but may be translated into multiple languages for reference. Only the English version of this document is the final and determinative format released by Diodes Incorporated.

LIFE SUPPORT

Diodes Incorporated products are specifically not authorized for use as critical components in life support devices or systems without the express written approval of the Chief Executive Officer of Diodes Incorporated. As used herein:

A. Life support devices or systems are devices or systems which:

1. are intended to implant into the body, or
2. support or sustain life and whose failure to perform when properly used in accordance with instructions for use provided in the labeling can be reasonably expected to result in significant injury to the user.

B. A critical component is any component in a life support device or system whose failure to perform can be reasonably expected to cause the failure of the life support device or to affect its safety or effectiveness.

Customers represent that they have all necessary expertise in the safety and regulatory ramifications of their life support devices or systems, and acknowledge and agree that they are solely responsible for all legal, regulatory and safety-related requirements concerning their products and any use of Diodes Incorporated products in such safety-critical, life support devices or systems, notwithstanding any devices- or systems-related information or support that may be provided by Diodes Incorporated. Further, Customers must fully indemnify Diodes Incorporated and its representatives against any damages arising out of the use of Diodes Incorporated products in such safety-critical, life support devices or systems.

Copyright © 2016, Diodes Incorporated

www.diodes.com