THIS DRAWING IS UNPUBLISHED. RELEASED FOR PUBLICATION -,- .
© COPYRIGHT - By - ALL RIGHTS RESERVED.

LOC	DIST
AJ	00

REVISIONS

P	LTR	DESCRIPTION	DATE	DWN	APVD
	AV4	REVISED PER ECO-11-005030	11MAR11	RK	HMR

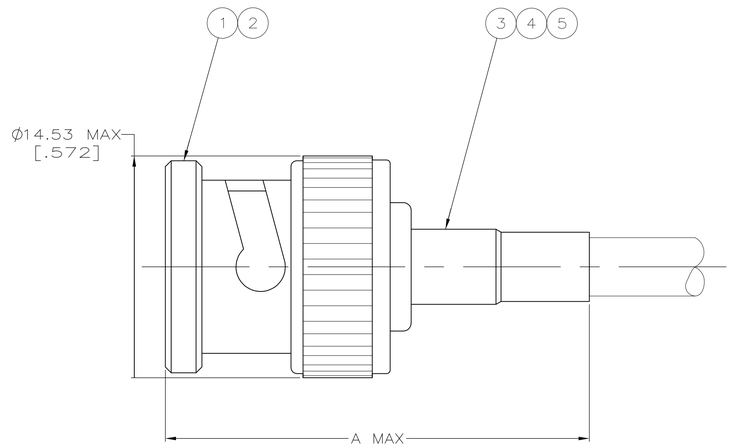

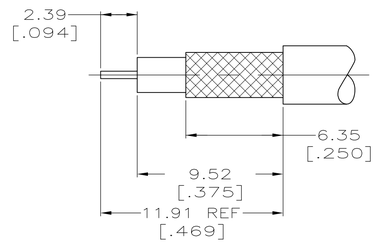

RECOMMENDED STRIP LENGTH

1. USE INSTRUCTION SHEET 408-9088
2. SPECIAL USE OF PRO-CRIMPER HAND TOOL AND DIE, USE RG-59 SQUARE CRIMP ON THE CENTER CONTACT AND RG-58 ROUND CRIMP ON THE FERRULE
3. SEE SEPARATE RESTRICTED CUSTOMER DRAWING WITH THIS PART NUMBER

	FOR USE WITH CABLE	A	CRIMP CONTACT (SQUARED)	CRIMP FERRULE (DIA)	CRIMP TOOL	DIE SET	(5) PLASTIC TUBING QTY=1	(4) TUBING QTY=1	(3) FERRULE QTY=1	(2) CONTACT QTY=1	(1) PLUG ASSY QTY=1	PART NUMBER
OBSOLETE	RG-59 TYPE,C.C=.031 DIA,CAROL COLUMBIA,C1103	27.69 [1.090]	.044	.240	354940-1	58536-1	–	–	9-50428-0	1-221182-0	221184-2	9-221185-4
OBSOLETE	RG-179/U,179A/U,179B/U,187/U,187A/U	28.96 [1.140]	.044	.104/.170	354940-1	318451-2	227194-2	222001-4	9-328666-0	1-221182-2	221184-3	9-221185-3
OBSOLETE	RG-6/U,6A/U	37.85 [1.490]	.044	.330	354940-1	58538-1	–	–	9-51713-1	1-221182-0	221184-5	9-221185-2
OBSOLETE	RG-59/U,59A/U,59B/U	27.69 [1.090]	.044	.240	354940-1	58536-1	–	–	9-50428-0	221182-2	221184-2	9-221185-1
OBSOLETE	BELDEN 9248	27.69 [1.090]	.044	.265	354940-1	58536-1	–	–	9-50427-0	221182-8	221184-1	9-221185-0
	BELDEN 643948	29.72 [1.170]	.044	.240	354940-1	58435-1	–	–	9-221132-0	1-221182-0	221184-8	3-221185-6
OBSOLETE	BELDEN 633938	27.69 [1.090]	.044	.265	354940-1	58536-1	–	–	9-50428-0	221182-8	221184-1	3-221185-5
	C&M 17189	28.96 [1.140]	.044	.104/.170	354940-1	318451-2	414932-2	–	9-328666-0	1-221182-6	221184-3	3-221185-4
OBSOLETE	BELDEN 88281	27.69 [1.090]	.044	.330	354940-1	58538-1	–	–	9-221132-2	1-221182-0	221184-1	3-221185-3
	COMSCOPE F59 HEC-2	28.96 [1.140]	.044	.265	354940-1	58536-1	–	–	9-50427-0	1-221182-0	221184-2	3-221185-1
OBSOLETE (3)	–	–	–	–	–	–	–	–	–	–	–	3-221185-0
	COMM/SCOPE S59HEC	28.96 [1.140]	.044	.265	354940-1	58536-1	–	–	9-50427-0	221182-2	221184-6	2-221185-9
(2) OBSOLETE	MADISON 9292, 9296 OR MONTROSE 8686, 8687	28.96 [1.140]	(2)	(2)	58433-1	58435-1	–	–	9-50427-1	221182-2	221184-7	2-221185-8
OBSOLETE	RG-59 TYPE,C.C=.031 DIA,CAROL COLUMBIA,C1103	27.69 [1.090]	.044	.240	354940-1	58536-1	–	–	9-50428-0	1-221182-0	221184-2	2-221185-7
	BELDEN 8281, 9231	31.75 [1.250]	.044	.330	354940-1	58538-1	–	–	9-50427-2	1-221182-0	221184-4	2-221185-6
OBSOLETE (2)	MADISON 9292, 9296 OR MONTROSE 8686, 8687	28.96 [1.140]	–	–	58433-1	58435-1	–	–	9-50427-1	221182-2	221184-7	2-221185-5
OBSOLETE	C&M CABLE 25785	28.96 [1.140]	–	–	354940-1	58304-4	–	–	3-328666-6	221182-4	221184-6	2-221185-4
	MONTROSE CBL8196	28.96 [1.140]	.044	NOT ROUND	354940-1	58174-1	–	–	9-329461-2	221182-2	221184-3	2-221185-3
OBSOLETE	ERICSSON TZC	28.96 [1.140]	–	–	354940-1	58304-3	–	–	414506-3	1-221182-2	221184-3	2-221185-2
OBSOLETE	CUSTOM CABLE (JOD=.105, DOD=.062, COD=.015)	28.96 [1.140]	.044	.104/.170	354940-1	318451-2	227194-2	222001-4	9-328666-0	221182-6	221184-3	2-221185-0
SUPERSEDED BY 221185-5	GEPCO VP6000	30.20 [1.189]	–	30.20 [1.189]	354940-1	220189-7	–	–	9-221132-2	1-221182-0	221184-4	1-221185-9
	AT&T 735A	28.96 [1.140]	.044	NOT ROUND	354940-1	58174-1	–	–	9-328666-2	221182-6	221184-3	1-221185-8
OBSOLETE	RG-6 TYPE	37.85 [1.490]	–	–	354940-1	220189-7	–	–	9-51713-1	1-221182-6	221184-5	1-221185-7
SUPERSEDED BY 221185-1	MADISON CABLE TYPE CL2P WITH 18 AWG CENTER CONDUCTOR	27.69 [1.090]	–	–	354940-1	58086-1	–	–	9-50427-0	221182-8	221184-1	1-221185-6
	BELDEN 1164A, 1167A	28.45 [1.120]	.044	NOT ROUND	354940-1	58174-1	–	–	9-329461-0	1-221182-6	221184-3	1-221185-5
OBSOLETE	AT&T KS 19224 L2 CABLE	28.96 [1.140]	–	–	354940-1	58174-1	227194-2	222001-4	9-328666-2	1-221182-2	221184-3	1-221185-4
OBSOLETE	ASTRO 20-435-B OR 20-405-E	28.96 [1.140]	.044	NOT ROUND	354940-1	58174-1	227194-2	222001-4	9-329461-0	1-221182-2	221184-3	1-221185-2
OBSOLETE	RG-59/U,59A/U,59B/U	27.69 [1.090]	.044	.240	354940-1	58536-1	–	–	9-50428-0	221182-2	221184-2	1-221185-1
	BELDEN 9145	27.69 [1.090]	.044	.240	354940-1	58536-1	–	–	9-50428-1	1-221182-0	221184-2	1-221185-0
	RG-59 TYPE,C.C=.031 DIA,CAROL COLUMBIA,C1103	27.69 [1.090]	.044	.240	354940-1	58536-1	–	–	9-50428-0	1-221182-0	221184-2	221185-9
	RG-179/U,179A/U,179B/U,187/U,187A/U	28.96 [1.140]	.044	.104/.170	354940-1	318451-2	227194-2	222001-4	9-328666-0	1-221182-2	221184-3	221185-8
OBSOLETE	RG-6/U,6A/U	37.85 [1.490]	.044	.330	354940-1	58538-1	–	–	9-51713-1	1-221182-0	221184-5	221185-7
OBSOLETE	TIMES RG-59/U DOUBLE BRAID WITH .270 O.D.	27.69 [1.090]	–	–	354940-1	58086-1	–	–	9-50427-0	221182-2	221184-2	221185-6
	BELDEN 8281, 8281F, 9231 AND GEPCO VP6000	31.75 [1.250]	.044	.330	354940-1	58538-1	–	–	9-221132-2	1-221182-0	221184-4	221185-5
OBSOLETE	BELDEN 8218	28.45 [1.120]	.044	NOT ROUND	354940-1	58174-1	–	–	9-329461-0	221182-6	221184-3	221185-3
	RG-59/U,59A/U,59B/U	27.69 [1.090]	.044	.240	354940-1	58536-1	–	–	9-50428-0	221182-2	221184-2	221185-2
	BELDEN 9248	27.69 [1.090]	.044	.265	354940-1	58536-1	–	–	9-50427-0	221182-8	221184-1	221185-1

THIS DRAWING IS A CONTROLLED DOCUMENT.

DIMENSIONS: mm [INCHES]

TOLERANCES UNLESS OTHERWISE SPECIFIED:
0 PLC ± –
1 PLC ± –
2 PLC ± 0.41 [.016]
3 PLC ± –
4 PLC ± –
ANGLES ± –

MATERIAL –
FINISH –

DWN B. WERNER 1-17-90
CHK D. LAMAN 2-15-90
APVD M. PHILLIPS 2-16-90
PRODUCT SPEC 108-12095
APPLICATION SPEC –
WEIGHT –

TE Connectivity

NAME PLUG, 75 Ohm, COMMERICAL BNC

SIZE	CAGE CODE	DRAWING NO	RESTRICTED TO
A1	00779	C-221185	–

CUSTOMER DRAWING | SCALE 5:1 | SHEET 1 OF 1 | REV AV4

4805 (3/11)