THIS DRAWING IS UNPUBLISHED. RELEASED FOR PUBLICATION -,- .
© COPYRIGHT - By - ALL RIGHTS RESERVED.

LOC	DIST
AF	50

REVISIONS

P	LTR	DESCRIPTION	DATE	DWN	APVD
	R	REVISED PER ECR-12-013518	23NOV2012	KH	PD

1 CONTINUOUS STRIP ON REELS.

2 WIRE SIZE IS [#18-#14] AWG.

3 MATING TAB THK TO BE .032±.001.

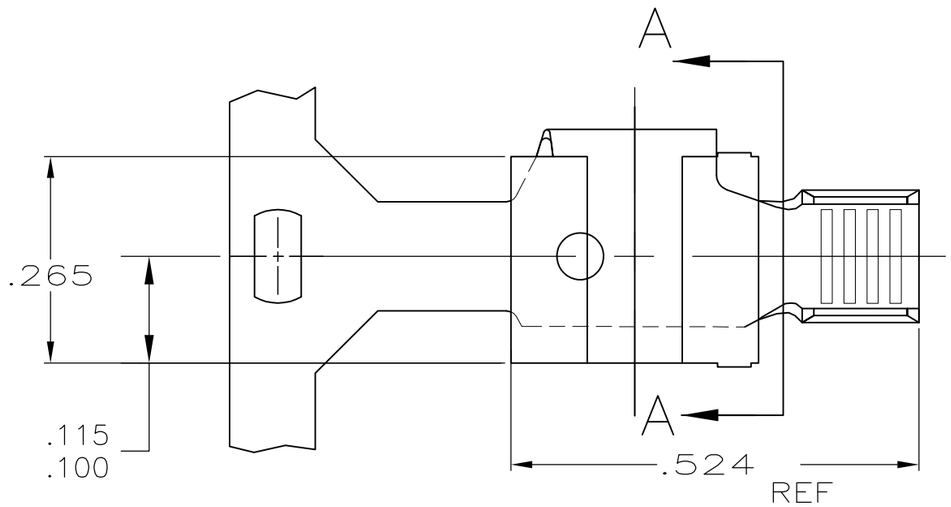

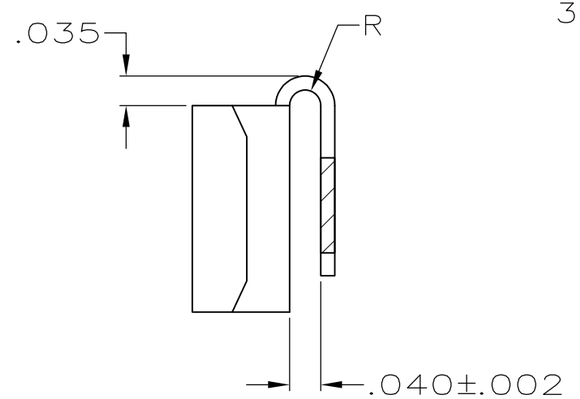

SECTION A-A

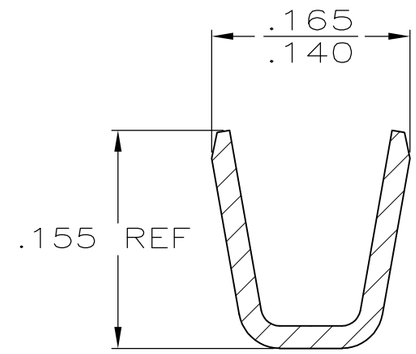

SECTION B-B
SCALE 8:1

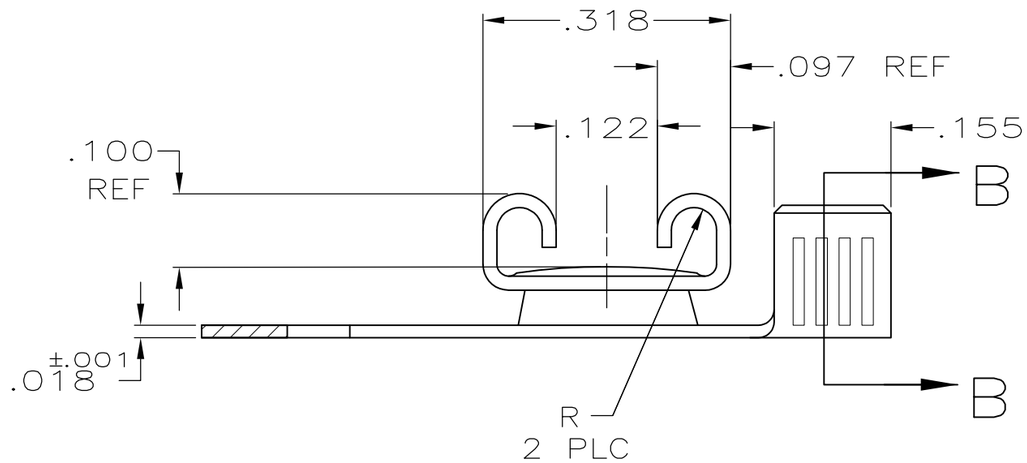

FINISH	MATERIAL	PART NO
TIN	BRASS	63647-3
TIN	H03 PHOS BRONZE	63647-2
-	BRASS	63647-1

STRIP LENGTH ±.015	TYPE	WIDTH	±.002 HEIGHT	WIRE
.188	F	.120	.062	18
			.067	16
			.075	14

WIRE BARREL CRIMP

THIS DRAWING IS A CONTROLLED DOCUMENT.

DIMENSIONS: INCHES

TOLERANCES UNLESS OTHERWISE SPECIFIED:

0 PLC	± -
1 PLC	± -
2 PLC	± -
3 PLC	± .010
4 PLC	± -
ANGLES	± -

MATERIAL: SEE TABLE

FINISH: SEE TABLE

DWN	JR RUTH	4/3/92
CHK	MS FEHER	4/3/92
APVD	R KUZO	4/3/92
PRODUCT SPEC	-	
APPLICATION SPEC	114-2032	
WEIGHT	-	

TE Connectivity

NAME: RECEPTACLE, FASTON, FLAG, REVERSIBLE, .250 SERIES
-

SIZE	CAGE CODE	DRAWING NO	RESTRICTED TO
A3	00779	C-63647	-

CUSTOMER DRAWING

SCALE	SHEET	REV
5:1	1 OF 1	R